Theory of Operation: I-Tech Power Supplies

Eric Baker Last Edited 9/21/04

This work is intended to describe the operational theory behind the power supplies in the I-tech series of Crown amplifiers.

Designers include: Eric Baker, Sergio Busquets-Monge, Ben Carroll, David Evans, and Gerald Stanley.

Topology:

Phase-modulated, full-bridge, series-resonant converter

Control strategy:

Constant line current for improved power-factor

Circuit Level Block Diagram

The basic block diagram appears below as Fig. 1. The stages of power processing include the following:

1) EMI filter: Reduces power line conducted noise from the power supply

2) Full-bridge rectifier: Rectifies the AC line providing a DC bulk supply for the full-bridge of switches

3) Impedance matching capacitor bank: Provides charge storage and a high-current low-impedance source

4) Full-bridge switch network: chops the DC bulk voltage in to discrete pulses

5) Series-resonant tank: Works as a constant current source for the main power transformer

6) Step-up transformer: Steps up the voltage from approximately 60V on the primary to the secondary voltage

7) Full-bridge rectifiers: Creates pulsating DC from the high frequency AC coupled through the transformer

8) Secondary energy storage: Serves as an energy storage reserve for the amplifier.

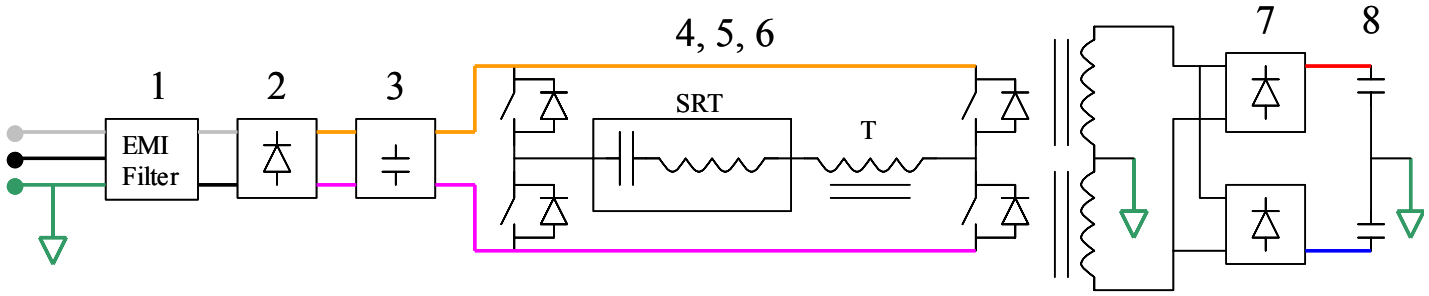

Fig. 1. Block diagram of the power supplies

Phase Shift Modulation

The core of the converter is made up of two half-bridges, shown above in **4,** which are connected between a positive bulk voltage (Upper Buss) and a return (Lower Buss). The switches, in each half-bridge, alternate in turning on and off, at high frequency (40-41.7kHz), in order to obtain a 50% duty cycle square waveform at each of the respective center points. One center point ('A' or the leading leg made up of Q21,23,25,27,29,& 31) connects to the series resonant tank (SRT), while the other center point ('B' or the lagging leg made up of Q33, 35,37,39,41, & 43) connects to the transformer (T). By varying the relative phase of these 50% duty cycle square waves, the effective duty cycle, seen differentially from one center point to the other, can range from 0% to 50% corresponding to phase relationships of 0° and 180° respectively. The diagram below, shown as Fig. 2, illustrates this point. In the first column both half-bridges are in phase, thus the effective differential voltage applied to the SRT and T is zero. In the second, third, and fourth columns the effective duty cycle has been increased to 16.7%, 33.3%, and 50%, respectively. This type of modulation is called phase shift modulation.

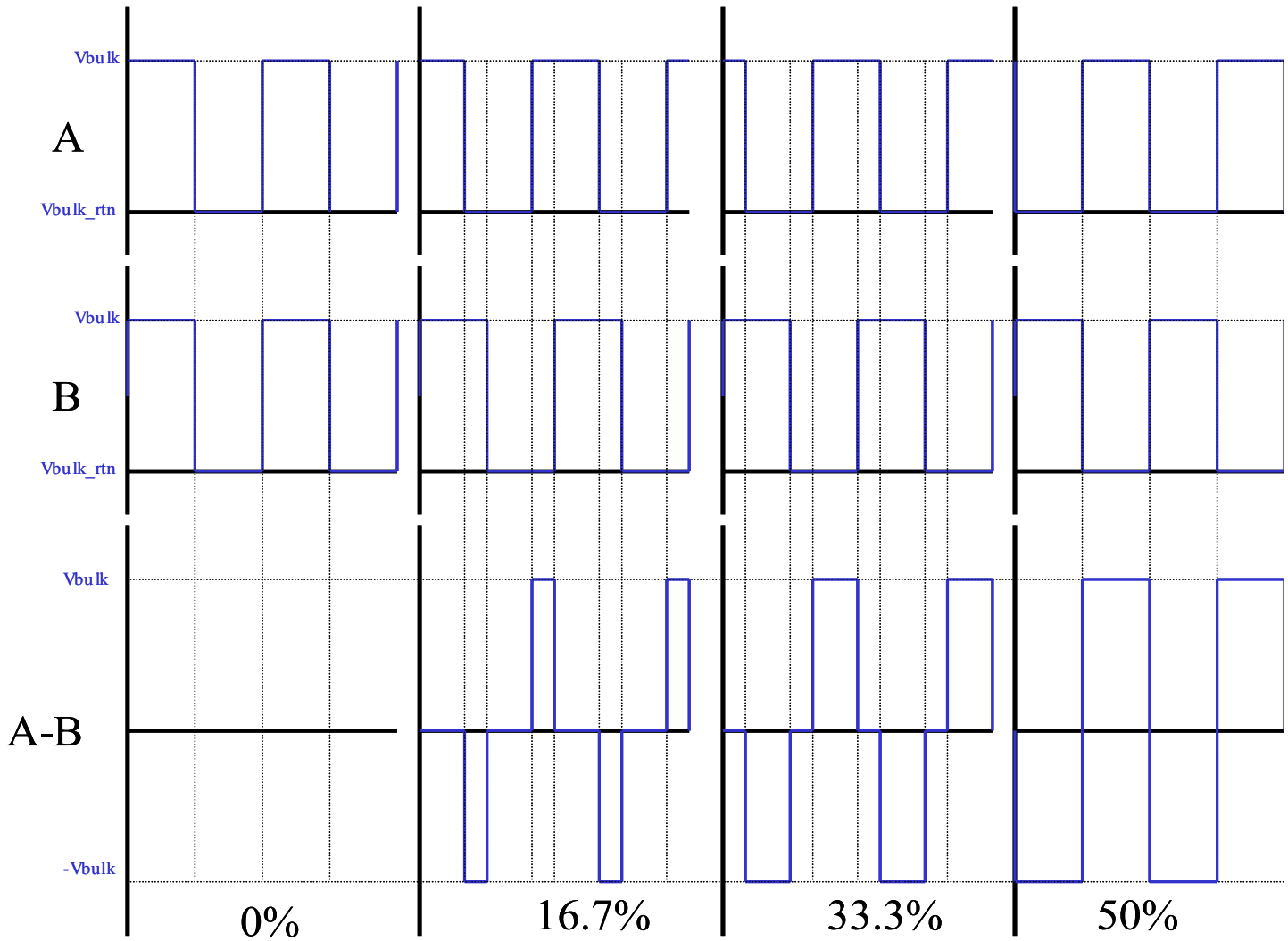

Fig. 2. Phase shift modulation visualization

Phase shift modulation is used, in conjunction with the series resonant tank, to provide a square wave of approximately 60V peak amplitude to the primary of the transformer, (T21). As the line voltage (50-60Hz) varies sinusoidally over each half cycle, the relative phase of the half bridges is also varying in order to try and maintain the voltage on the transformer primary. Another variable, that plays a role in the calculation of the effective duty cycle, is the load the amplifier places on the power supply. The larger the measured voltage drop on the power supply output rails, when compared to a preset reference, the larger the error generated in the control, and thus the duty cycle will also increase.

Power Factor Correction

In order to best use an AC lines full potential while minimizing the distortion cause by a product connected to it, the ideal load would be a resistive one. With a resistive load, the current is in phase with the line voltage and the harmonic content is defined only by the fundamental.

Power factor is defined by the ratio of the real power to the product of the RMS voltage and RMS current consumed by a product. With a resistive load this leads to a value of unity. Most conventional power supplies with a simple transformer/rectifier combination have effective power factors in the 0.6-0.7 range, hence the AC line is called to deliver a larger RMS current than is actually ideally necessary to meet the power demands of a product. Fig. 3 , shown below, shows an ideal power factor and one of nearly constant current, as was the goal for the I-Tech series of power supplies. The main reasons non-sinusoidal power factor was chosen were available space, device utilization, and the desire to see high power factor and regulation achieved in a single stage of power processing.

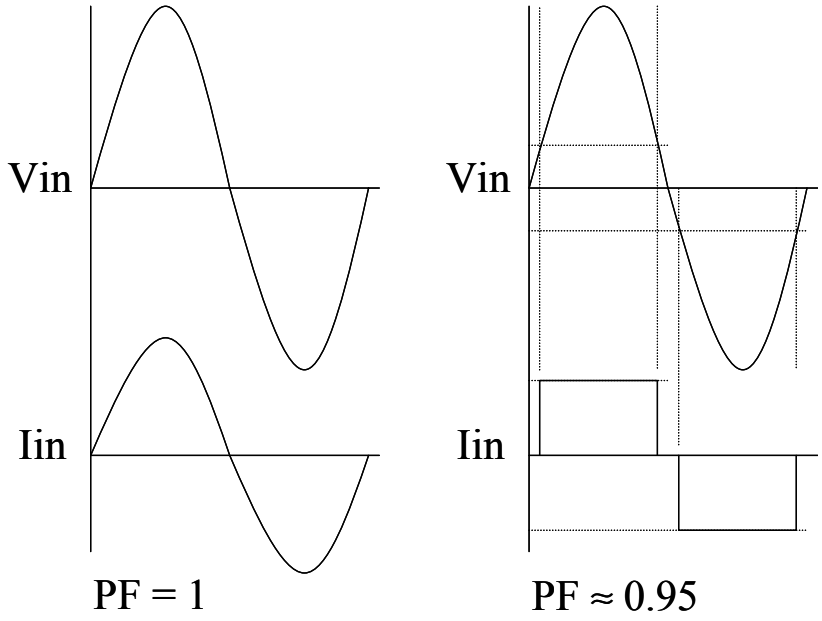

Fig. 3. Unity power factor compared to the improved power factor generated by the I-Tech power supplies

Control Breakdown

Now that some basics are defined, the control can be considered. Shown below, as Fig. 4 is the control block diagram for the power supply system. Definitions for the various inputs and node points are shown below in Table 1.

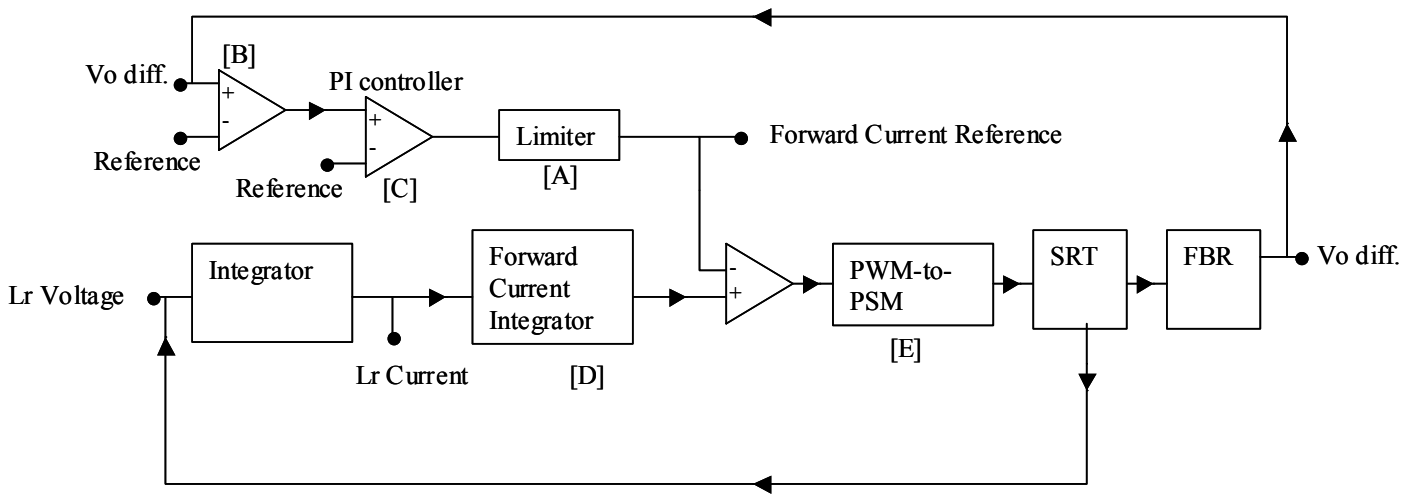

Fig. 4. Control block diagram

Table 1. Definitions of various terms and functional blocks in the control diagram

Input or node point	Description
Vo diff.	Scaled differential rail voltage feeding the amplifier (U102-B)
Reference	Known voltage used to compare to an input
PI controller	Proportional / Integral controller used in the main voltage feedback control loop (U108-D)
Limiter	Circuit which can vary the absolute limit of the PI controller thus keeping the error generated by the controller within set limits (U108-B, U108-C, U115)
Lr Voltage	Voltage across a single turn of the resonant inductor (I+_PSC to I-_PSC)
Lr Current	Scaled current through the resonant inductor found by performing mathematical integration on the voltage across it (TP101)
Forward Current Integrator	Integrates the inductor current when the converter is conducting in the forward direction in order to find the average AC line current (U101)
PWM-to-PSM	Pulse width modulation to phase shift modulation converter (U105 & U111)
SRT	Series resonant tank (C38-45, C79-80, L21)
FBR	Full bridge rectifier (D69-72)

There are two operating modes for the power supply. Mode 1 is used initially every time the power is applied or for various other conditions such as when the line voltage drops too low, or the front panel switch is cycled, or the breaker is cycled, or if for some reason the output rail voltage drops below a preset minimum,

indicating either a short circuit or amplifier problem. Mode 1 is basically a soft start operation mode used to reduce stress on the AC line when charging up the secondary side capacitors. In this mode the current limit is fixed at a suitably low level, and the control loops are disabled. With the current limit set low, the bulk of the capacitance can be charged at a reasonable rate such that AC line surge is minimized. This mode is disabled once the power supply output rails reach their nominal values.

Mode 2 is defined as the normal operation mode for the supply. During this mode calculations are constantly being made to set the upper current limit in order to obtain the same max power output regardless of the AC input voltage. The I-Tech power supplies are universal input as these supplies can be run anywhere from 85Vac to 277Vac obtaining full power between 120Vac and 240Vac.

The limiter circuit, as it is shown in Fig. 4 as [A], contains an analog multiplier (U115) along with other circuitry. Here, the scaled product, of a constant and the differential output voltage, is divided by the scaled input voltage. In addition, the circuit compensates for the increased conduction angle on the AC line at higher input voltages and current related losses in the converter. Because the turns ratio of the step-up transformer (T21) and the output voltage is regulated, the voltage needed on the primary of the transformer can be achieved earlier in the AC half-cycle and maintained longer as the AC line voltage is increased. Conduction losses also increase with lower line voltages, due to the high currents necessary to achieve a regulated supply with a fixed output voltage.

Normal operation involves sampling the average input voltage then calculating the correct upper current limit for the supply necessary to make bench power. By comparing the scaled differential rail voltage to a known reference, a current limit is derived from the feedback control [B] and [C]. As demand on the power supply increases, the rails will drop. The difference between the reference and the scaled rail voltage is the error which determines the average current limit. On a switching cycle basis, the input current is integrated in [D] until the average current limit is reached. The line current is found by first integrating the voltage across a single turn of wire on the resonant inductor. This yields a scaled waveform that has the shape of the current through the resonant tank. If this current is then integrated only over the portion of time that the phase shifted half-bridges overlap, the AC input current can be obtained.

Once the integrated AC input current reaches the current limit, the switching cycle is terminated in [E]. The operation of this circuit generates a pulse width modulated signal, which is converted to phase shift modulation in order to control each of the two half-bridges. This action is done numerous times through the single AC half-cycle then continues over successive AC half-cycles. Just as a note, there can be a variance in

the power dependant current limit during the half-cycle if the power demand is impulsive enough, but most likely the AC current waveform will look very square-like with the addition of rounded edges.

Operational Details

The following section describes the power-up sequence for various circuits throughout the power supply. There are five circuit boards that make up the power supply:

I-tech panel 3 (PWA #s: 8K 137095, 6K 137098, 4K 137101)

A) Power supply main

B) EMI filter / LVPS

C) Power supply control

I-tech panel 2 (PWA #: 136541)

F) Power supply gate drive CH-1

G) Power supply gate drive CH-2

Once the switch / breaker is closed the power flow begins in the EMI filter / LVPS board. The line voltage passes though the passive filter components. The LVPS, or low voltage power supply generates isolated ±20V rails that power the controller and gate drive circuitry. The line voltage is also stepped down for sensing through the precision SIP (RN1) on this board.

The scaled voltage is processed (U107-A,B,C,D, U102-C) and utilized by the controller for under voltage lock-out (U106-C) and calculation of the absolute maximum allowable current limit. Until the front panel switch is depressed, the controller holds LOW_ENERGY low which does not allow the power supply to function. As the front panel switch is pressed, the controller begins in soft-start mode. The PWM controller chip (U105) begins switching at a frequency determined by C107 and R120 (37-38kHz).

The average line current is sensed indirectly, as described above, through the voltage across the resonant inductor (L21) and the circuitry centered around U101. As in normal operating mode, when the preset current level is reached (pin 5 of U104-A), the comparator driving U109-C changes state causing the switching pulse width to terminate. This in tern sets the phase angle between the two half-bridges. The greater the pulse width, the greater the phase shift. The conversion from pulse width modulation to phase shift modulation takes place in the circuit containing U109 and U111.

As the rail voltages build up and reach their nominal value (as determined by the circuit surrounding U103-D), soft-start is released and the control circuit made up of U108-A takes over. The error-driven control

loop constantly adjusts the average input current level in order to keep the rails as close as possible to the nominal values. The high-voltage rails are the main source of regulation for the converter. The low-voltage faster loop (U108-A) is used only to keep the low voltage rails from dropping below approximately 16.5V under extraordinary conditions.

Once in normal operation mode, the synchronizing clock signal (CLOCK) is used to keep the power supply switching at a frequency that results in an integer when taking the ratio of the BCA switching frequency over the power supply switching frequency. In other words, the BCA switching frequency is a harmonic multiple of the power supply switching frequency.

In addition, there also exists a circuit used to keep the high voltage rails from overshooting more than the 10% allowed by the over-voltage protection circuitry. This circuit is made up of U103-A and the surrounding circuitry. It simply reduces the voltage reference on the high-voltage regulator input (pin 12 U103-D) when the rails are too high such that the converter can quickly respond to rapidly changing power demands. Other circuits include over-voltage protection (U103-B), over temperature protection (U116-A) and the necessary crowbar protection, which clamps the high voltage rails and shuts the power supply down in the case of an amplifier problem.

Summary

The converter operates by utilizing a voltage controlled current loop in order to regulate the output voltage. Internal time constants are slow enough to allow almost constant current to be obtained from the AC line during the conduction period. Power factors above 95% can be had at medium to high power levels leading to much better utilization of the power provided from the AC mains. Due to the adaptive nature of the control, the power supply can operate at any voltage from 85VAC to 277VAC, with full power being achieved from 120VAC to 240VAC.

1. I-TECH THEORY OF OPERATION

1.1. Audio Signal Path

1.1.1. Input Stages (USP3T and Input PWA)

Signal is presented to the I-TECH via an analog path XLR, or a digital path via the AES/EBU digital inputs to the USP3T. These paths can be selected either using the front LCD panel menu buttons or using the IQwik interface. The analog path is a specially designed low-noise balanced input to the A/D converters. The maximum input level (the level at which the ADC reaches full scale) may be set to +15dBu or +21dBu by using the front panel menu or IQwic. Optimal signal-to-noise ratio can be achived by setting the max input level to +21dBu and setting the amplifier gain to its minimum value. (Signal-to-noise ratio is specified and factory tested with gain set at 26dB). The balanced analog output design on the USP3T, U12 and U13 then provide final line-level amplification and filtering to drive the BCA differential receivers U800 and reverse equalization filters and trimmers located on the input PWA. Channel level single-ended outputs may be taken at test points TP801 and TP818 for channels 1 and 2 respectively. These test points are a good signal check point if there is no signal from the power amplifier channel when there is a signal from the USP3T. Approximate gain measured from these test points to amplifier output is a little less than 26 dB. Note: See the USP3T theory of operation included in section 1.5 for more detail.

In order to allow a single USP3T module to be used across all I-TECH models, the first stage of the input PWA for the I-T6000 and I-T4000 include a fixed level of attenuation. In an I-T6000, U800 is scaled for 1.41 dB of attenuation. In an I-T4000 it is scaled for 2.27dB of attenuation.

The reverse equalization filters are tuned 6th order low-pass sections. U809, U802 for channel 1 and U815, U803 for channel 2 compensate in band frequency response ripple and upper end peaking (i.e. 20Khz) inherent in PWM switching amplifiers. Equalization adjustment trimmers R848 and R920 are then adjusted optimally at 20 kHz with an 8-ohm load or the desired nominal load impedance for maximal flatness. Care must be taken as any component change in the signal path such as LP and LN inductor pair, front end PWA, or gate drive PWA changes will require a re-adjustment of these trimmers.

Also on the Input PWA are the DC Servos. U807 is used for channel 1 and U814 for channel 2. The DC servos sense DC or low frequency (less than 35 Hz) voltage on the output of the amplifier and provide compensation to zero DC offset. This high-pass form of filtering reduces, for example, back EMF buildup from driver asymmetrical movement about center position. Note the STBY lines through U808 going to each channel servo. These signals, when active, low-disable the high-gain integration effect of the servo when the amplifier is in a sleep or non-switching mode so as to not build erroneous offsets when the amplifier is enabled back out of sleep mode.

Continuing the signal path, the signal enters at CH1 Amp In and goes into the Front End Module where the conversion to PWM occurs. The output of the Front End Module connects to the Gate Drive PWA which in turn connects to the output power devices, then to the output filter PWA and finally to the output terminals.

1.1.2. Error Amplifier (Main Amplifier PWA)

The signal next enters the main amplifier error amp (U600) where it is mixed with a small portion of the output voltage and current in such a way as to control the amplifier's overall output performance. From the error amplifier, the signal is divided and fed to the modulator on the Front End cards. Since the modulator circuit is balanced, the drive signal for the positive modulator is inverted by U600.

1.1.3. Modulator (Front End Cards)

U602 and U603 are high-speed differential comparators. U602 is the positive comparator and U603 is the negative comparator. The comparator section has two outputs: inverting and non-inverting. The output is therefore balanced. The audio signal is applied to the inverting input of both differential comparators (with the positive modulator receiving the audio out-of-phase from the negative modulator). The 250 kHz (I-TECH 4K, 6K) , 200 kHz (I-TECH 8K) triangle wave (described below) is applied to the non-inverting input of both differential comparators. With no audio signal, the bipolar triangle wave is therefore compared to a zero-volt signal and this results in a square-wave pulse train that is passed to the NAND gate section of the differential comparator.

The balanced output of U602 forms the positive portion of the output waveform (Vp). The output of U603 is also balanced and forms the negative portion of the output waveform (Vn). These two balanced signal lines are routed to the output stage drivers, U604 and U605. If an audio signal is present at the inputs of the modulators, the triangle wave will be compared to a varying signal at the comparators and the outputs of the NAND gates will be a pulse train in which the widths of the pulses vary with the audio amplitude.

The Front End modules are identical and can be swapped with each other within the unit for troubleshooting purposes, although a calibration may be required on Imon setting. The Front End modules are custom for the I-TECH 8K.

1.1.4. Clock (Main PWA) and Triangle Generator (Front End Card)

The clock generator using Y1000 being 4 MHz (I-TECH 4K, I-TECH 6K) and 3.2 MHz (I-TECH 8K) is the main clock used to provide BCA amplifier and power supply (after it has passed through soft start) clock sync base. U1000 and U1007 are the divider and buffered signals for power-supply sync, and BCA XTAL clocks over to the triangle generator. The series resonant circuit L1006, L1007, and R1105 provides a cleaner sync signal for the power supply. You can tell if the amplifier and power supply are in sync by measuring the clock frequency on the power supply modulator board J100 pin 7 (3rd pin down) for a 40Khz TTL signal.

From here, silkscreens on the PWA say 2*CLK and 4*CLK, which are defined as double the PWM-base-divided clock. For example, using the 3.2 MHz clock of the I-TECH 8K and to obtain the PWM-base-divided clock, divide by16 to get 200 kHz. So therefore 2*CLK would be 400 kHz and 4*CLK would be 800 kHz which will be referred to again below.

The triangle generator is a discrete designed operational amplifier with optimally designed frequency-response properties, providing high accuracy integration of the incoming square wave clock from U514. TP611 then is the point where the triangle wave is actually measured. Again, the frequency should be 250 kHz for the I-TECH 4K and I-TECH 6K, and 200 kHz for the I-TECH 8K. Several feedback signals are summed into this discrete operational amplifier to provide corrective measures for the modulation of the BCA amplifier, for improving dynamic range and improving distortion. Thus it is best to measure this signal under no signal and “nominal” high-voltage power-supply rails (which provides an approximate 5VDC at the proportional Vcc test point TP1016. This potential varies as +/- Vcc levels vary. The nominal +/- Vcc power supply rails are approximately 160VDC, 180VDC and 200VDC no load, for the I-TECH 4K, I-TECH 6K and I-TECH 8K respectively.

1.1.5. PWM Output Power generation (Ref CH1 Main Amplifier PWA)

The PWM modulated 250 kHz (I-TECH 4K, 6K), 200 kHz (I-TECH 8K) signals exit the modulators and enter a voltage translator formed by Q500 – Q510 for SP (the high side of the half bridge), and Q519-Q529 for SN (the low side of the half bridge.) These translators convert the balanced PWM TTL signals into a single-ended discrete FET buffer waveform drive, which in the case of

SP, via U500 FET driver re-references the half-bridge high-side FET sources to the VP node. And in the case of SN, via the U501 FET driver, re-references the half-bridge low side FET sources to the –Vcc bulk power supply voltage. The –VCX labeled across U501, the low half bridge side, is an added DC offset voltage (around 25VDC- 40VDC) which otherwise would not have any, where U500 already does, in order to equalize propagation time delays within the gate drives of the SP and SN signals.

The “Vp+14” reference is actually the floating power supply for the discrete FET buffer and is derived from +/-Vcc power supply rails on the main PWA, via a start-up DC zener voltage, D1011, D1012, C1016 for the half-bridge high side, and D1018 D1019, C1020 for the half-bridge low side. This low-power-derived zener voltage provides only enough energy to charge C1016 and C1020 to get the power FETs to start to switch, but not to sustain the energy required to be able to continue switching this resonant circuitry. C1012, C1013, L1000, D1006-D1010 (for example) on the half-bridge high side form a high-frequency resonant wave generation and rectification recharging the main float gate drive storage capacitor C1016 upon each cycle of the BCA. Similar operation and references apply to the half-bridge low side of the BCA.

1.1.6 BCA PWM operation

For a qualitative description of output stage operation refer to Figure 1. All parts to the left of “Iout” are positive or “p” side parts and all parts to the right of “Iout” are negative or “n” side parts. The switches Swp and Swn are analogous to the FETs. Quiescent operation will be considered first. At the start of a switching cycle, Swp and Swn are both turned on. Current flows from +Vcc, through Swp, through Lp, through Ln, through Swn, and down to –Vcc. The current rises at a controlled rate in the Lp and Ln inductors (see the current diagram to the right in Figure 1). Halfway through the cycle, the switches turn off but the inductors have reached a certain current flow (the peaks on the diagram) and now must continue pushing current in the same direction. The current continues to flow in the same direction through the inductors but comes through the diodes because the switches are open. Specifically, current flows from –Vcc through D1, through Lp, through Ln, through D2, and to +Vcc while ramping down. At quiescent, the Lp and Ln currents cancel so the net voltage developed at Iout across the capacitor is zero. For positive output voltage, Swp is left on longer than Swn and for a negative output voltage, the opposite occurs. Note that for any output voltage, the “on” time of both switches will overlap, even if one is on longer than the other.

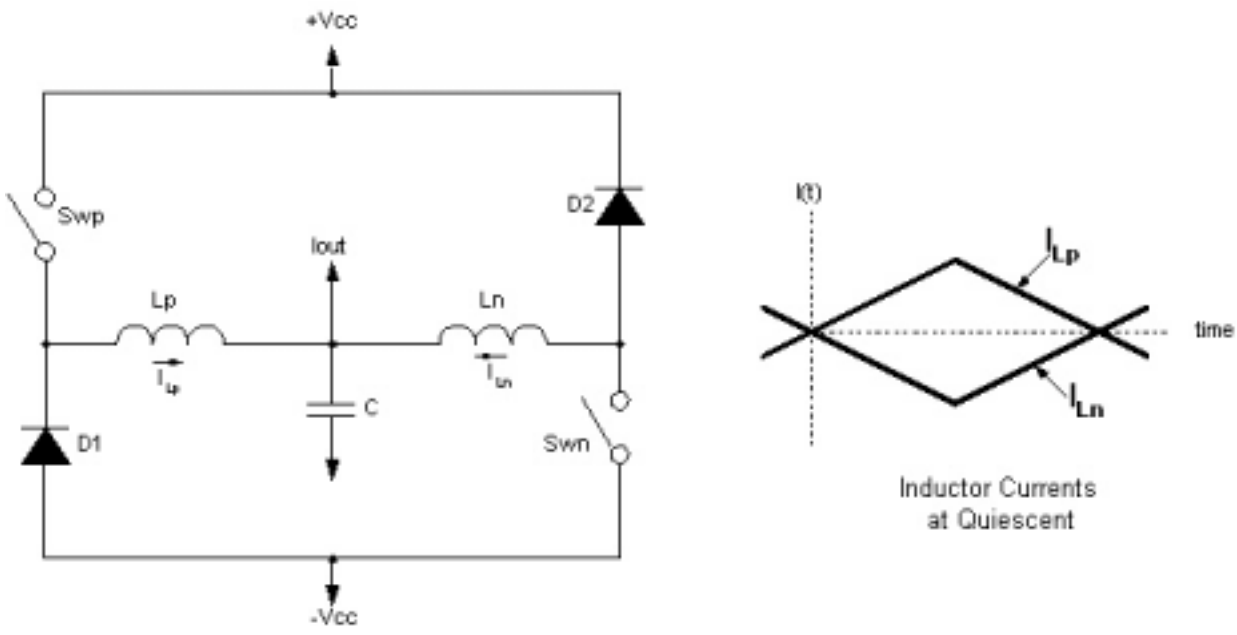

Figure 1. BCA Operation

Now, back to the description of output circuit flow: after the FETs, the signal is then routed to the BCA filter inductors (Lp and Ln). The combining point (B1) is then sent to the Output Filter.

With no audio modulation, the PWM pulse train that is sent to the gates of each set of FETs is the same and the duty cycle is approximately 50%. This means that for no audio input, the positive FETs (Q1000-Q1003) turn on and off at the same time as the negative FETs (Q1004-Q1007). As mentioned before, the Lp and Ln inductors control the rate of rise of the current during this time so that this does not act like a short during the couple of microseconds that they are on. The time that the FETs are on ramps current up in the inductors, which stores energy in them. This energy is released through the diodes (D1004A, D1004B, D1005A, D1005B) when the FETs are turned off. The Vp and Vn nodes swing between –Vcc and +Vcc with a duty cycle of approximately 50%.

Operating the output stage in this way causes the current in the Lp and Ln inductors to completely cancel under ideal conditions at the B1 node. This drastically reduces the filtering requirements necessary after the output stage. Matching requirements is therefore needed for these inductors within a channel.

If an audio signal is present at the input of the amplifier, the widths of the pulses at Vp and Vn change but the amplitude of the pulses stays at 2*Vcc. Positive audio signals will cause the positive side of the output stage to be on more than 50% of the time, while the negative side will be on less than 50% of the time. The total “on-time” will add to approximately 100%. Also, the on-time of the two polarities will overlap, so that when the negative side is on, the positive side is on also. For negative-going signals, the action is reversed (swap positive and negative). The result at the summing junction B1 is an amplified version of the input signal, unfiltered PWM switching. The B1 signal is then routed to the Output Filter.

1.1.6. Output Filter

The output filter has channel current sensing (LP and LN current plus output current), and limiting signals to send to the modulators, 2*CLK and 4*CLK shunt LC traps, to filter higher frequency

ripple due to not-exactly-matched components, output load-current sensing for feedback control via T301 and T302, output decoupling inductors L302 and L305 to decouple the amplifier for ultrasonics, high-frequency RF shunt capacitors located on the output connector bracket, and high-frequency shunt current detection via D301, D303 and their associated shunt resistors. Direct low frequency feedback is taken from the red binding post, so maximal amplifier and damping-factor control is there.

1.2. Protection and Control Circuitry

1.2.1. Protection mechanisms

Various mechanisms are implemented in firmware and hardware to control and protect the I-TECH series amplifiers.

Hardware implemented protection mechanisms include:

- Time-dependent current limit (I LIMIT)
- DC and LF protection (DCLF)
- High-frequency amplifier output shunt current protection (HF DETECT)
- High average amplifier output current (High average current shutdown, including shorted output)
- High voltage (+/- Vcc) under-voltage and over-voltage shutdown (VCC OK)
- Low voltage, housekeeping voltage level acceptable (LP OK)
- Thermal limiting protection (amplifier thermal cutout)
- Current feedback (+/- I sense)

Firmware implemented protection mechanisms:

Amplifier and power supply thermal driven compression (TLC)
Thermal compression is determined through a combination of thermal feedback and input signal. An input-level threshold is set based on thermal information. This threshold is 0 dB when the amp is “cold” and quickly decreases when the amplifier is above the thermal threshold.

High continuous power governor
Output current and voltage feedback are used to determine when the amplifier is delivering high continuous power (sine-wave bench power). The governor will allow bench power to be delivered for 3 seconds. After 3 seconds it will reduce output level. The governor will release a few seconds after signal is removed. The governor will not activate with typical musical signals regardless of power level.

High-volt rails droop compression
U828 signals the USP3T processor when the high-volt rails fall below a level set by the combination of R1225 and R1226. This signal causes the DSP to compress the input signal by just enough to keep the amplifier from shutting down due to under-voltage low-volt rails. This is designed to keep an amplifier from shutting down when an excessive instantaneous demand is placed on output power.

Line (mains) voltage droop compression
U828 signals the USP3T processor when the mains voltage falls below a level set by the combination of R1221 and R1222. This signal causes the DSP to compress the input signal by just enough to keep the amplifier from shutting down due to low mains. This is designed to keep an amplifier operating on low-voltage mains (less than 90V) from shutting down when large amounts of power are demanded at the output.

Audio output current levels are monitored by the use of transformer T301, T302. A small primary winding is in series with the output current. The secondary winding of these transformers develops a voltage across the input of U608. This op amp provides a current monitor signal that is scaled to approximately 6 Amps/1Volt for the I-TECH 8K and 5 Amps/1 Volt for the I-TECH 6K and I-TECH 4K. This output current is used for the following purposes:

1. Dynamic control and stability of the BCA under normal and reactive loading
2. Load monitoring

Low-frequency (20 – 20 kHz) audio output voltage levels are monitored directly from the output of each channel (red binding post). This representation of the output voltage, called CHn LF SENSE, is sent to various circuits in the amplifier where it is scaled appropriately for each application. This signal is used for the following purposes:

1. Output DC offset correction (see DC servo in section 1.1.1)
2. Output device fault detection.
3. Output level feedback to DSP (meters and compression)
4. Dynamic control and stability of the BCA
5. High damping factor

1.2.2. Current Limiter (ref channel 1 Output Filter)

To prevent excessive output current, the I-TECH incorporates an active current-limit circuit for each channel. Resistors R309-R314 in series with the Lp and Ln output coils are used to sense the inductor current. The voltage created by the output current thru the resistors is compared to a reference voltage set by R301 & R304, R303 & R308. These voltages are compared on U301. If either the Lp or Ln plus output peak current reaches the maximum permitted current, the output pin of the comparator goes low, which pulls the I LIMIT signal low through an opto-coupler (U300). This signal goes to the Front-End PWA and is used to turn the channel off. When the current out of the channel fails below the limit, the channel is enabled. C303 and R305 dynamically increase current limit via time constant to increase and allow very large current dynamic signals to pass undistorted.

1.3. Other System Circuits

1.3.1. Thermal Monitor

Thermal data for amplifier channel 1, channel 2, and the power supply is monitored and used for multiple purposes. Thermal sensors RT1007 and RT1035 (channels 1 and 2 respectively) connect to a scaling circuits on the front-end boards. The scaling circuit, built around U608, creates a DC voltage that represents amplifier temperature. The front-end board monitors its channel's temperature through U610. If the channel's temperature exceeds approx 95-100 degrees Celsius the channel will temporarily shut down. This action is commonly referred to as thermal cutout. Timing capacitor C657 and associated circuitry will hold the channel in standby through U609 for a period of time. The affected channel's standby node (STBY) will measure -15V during thermal cutout.

Similarly, the power supply provides a DC voltage representative of its temperature through U1004 on the BCA main board. The power supply control board is responsible for the power supply thermal cutout. See the power supply theory of operation for more detail.

DC voltages for channel 1, channel 2, and the power supply are fed to the ADC, U819, on the input PWA. U819 digitizes these signals and sends them serially to U401 on the display board. U819 utilizes an SPI synchronous serial buss for its communications with U401. U401 uses this

information to drive the thermal LEDs on the front panel and the fans. U401 then asynchronously sends all thermal data to the USP3T processor U1 on the USP3T board. The USP3T uses this data to drive such things as TLC and IQ thermal meters.

1.3.2. Standby and Sleep

The circuit nodes labeled CH1 STBY and CH2 STBY control whether or not the modulators are permitted to switch the output devices. Whenever the voltage on a channel's standby control line is less than 1.3 V, the front end will be inhibited from switching the output FETs. This mode may be called standby or sleep depending on what caused the condition.

Standby can be invoked by the user or by a protection circuit. For example, the amplifier puts itself in standby (stops switching) when the temperature of the output devices, as reported by U608, are above safe limits. The voltage on the standby (STBY) node will be approximately –15V when a protection circuit places the amplifier in standby. Similarly, the amplifier is said to be in standby whenever the user turns the channel off via IQwic. When this occurs, U102 on the USP3T board pulls the STBY node to approximately 0 V. (Note: the USP3T holds the amplifier in standby as it "boots up". This prevents the DAC, USP3T board U6 from sending spurious noise to the outputs before the DSP has it under full control. The ready LEDs are off whenever the amplifier is in standby.

Sleep occurs whenever there is no input to the amplifier for more than 1.5 to 2 minutes. U810 and U811 for channel 1 and U816 and U817 for channel 2 along with their associated components are used to determine when this condition is met. When the amplifier is sleeping the STBY node is held at approximately –15 V. When a signal is reapplied to the input of the amplifier the STBY is almost immediately released and the amplifier permitted to resume switching. This mode is intended to minimize switching losses. Since this mode is designed to be transparent to the end user, the ready LEDs on the front panel stay illuminated during this time. (Note: due to a firmware bug, early production units extinguished their ready LEDs when asleep. Updating FW to the latest version will restore proper LED operation.

Users may disable sleep mode by using IQwic (Amplifier Sleep Enable object). This is electrically achieved when the USP3T processor sends an asynchronous serial message to the display processor (U401) indicating the desired state of the enable line. U401 then sends a synchronous serial message (SPI) to the input board PLD, U822. U822 converts this serial bit stream to a parallel data and places the sleep enable bit on the correct pin.

The status of the STBY node is captured through a combination of Q800, R828, R874, R875, R868, R877, and R876 (see similar components for channel 2). Whenever the output of U811 goes low (sleep mode), Q800 turns on forcing the SLEEPMON node to 0 V. This voltage is fed to U822, the PLD, where it is converted to a serial bit stream and sent to the display processor. Similarly, the status of STBYMON is reported to U822. From these two pieces of information the USP3T and display processors are able to determine and report the switching status of the amplifier.

1.3.3. Fan Speed Control

The display processor controls the speed of both the power supply and amplifier fans using thermal information it obtains from U819 (see 1.3.1 Thermal Monitor). The fans are controlled in parallel. Independent control is not possible in this design. A control algorithm converts thermal information into a fan speed. Fan speed is expressed as a 6-bit binary number. Binary 0 equals off and binary 63 equals full speed. The fans' speed is sent as serial data to U822, the PLD. The PLD converts this binary serial data to parallel data on the appropriate pins of U822. An R2R ladder is used to create a DC voltage from the binary data. This DC voltage is buffered and

doubled by U823. The output of U823 is connected to a current source comprised of Q1019 and Q1020 on the main BCA board. This current source provides power to the fans.

1.4. Display

1.4.1. Digital Communications

I-TECH utilizes two processors to control and monitor the amplifier. The first is located on the USP3T board. It is commonly referred to as USP3T board U1, “the USP3T processor”, or “the Coldfire”. More details about this processor can be found in the USP3T theory of operation. The second processor is located on the display board. It is commonly referred to as U401, “the display processor”, or “the MCOR”. The two processors communicate with one another through a USART type serial communication buss (TX/RX). This buss is buffered on the display board and input board by U402 and U804 respectively. This buffering improves communication reliability in the noisy environment present in a switch mode amplifier. U401, the display processor, communicates with its peripherals using a synchronous serial buss. This is a SPI type buss which includes data in/out, a clock, and chip-enable lines. U401 uses this buss to communicate with U400 and U404 on the display board as well as U819 and U822 on the input board. The SPI lines are also buffered by U401 and U804.

1.4.2. LED indicators

All front-panel LED indicators (with the exception of Data, Fault, power, and AC present) are driven by U400. U400 is a serial device that receives synchronous serial data from U401 and uses it to drive the LED display. The fault, power, and AC presence indicators are controlled by the power supply. U401 may use Q402 to flash the power LED under low- or high-line conditions. The data LED is controlled directly by the USP3T.

1.4.3. LCD control

The LCD is controlled directly from U401. Additional circuitry is used to control display contrast and the status of the LCD backlight. U401 provides 4 bits of binary data to OPAMP U405. U405 in combination with D401 and Q400 provide the “high” current negative voltage necessary to bias the LCD. U401 may turn the LCD back light off using Q401.

1.4.4. Heart Beat

LED E22, not visible from the outside of the unit, flashes slowly to indicate that U401 is executing code. If this LED stops alternating between on and off, U401 has stopped executing its code.

1.4.5. Power Supplies

3.3V power for the processor and other digital hardware on the display board is generated by U407. U406 generates 5V power for digital devices on the input and display boards.

1.5. USP3T

The USP3T is integral to every I-Tech amplifier and provides input audio processing as well as protection of the amplifier for thermal limiting and output limiting. The USP3T works in conjunction with the MCORE processor located on the front panel display module to allow front panel access to control functions such as attenuation, mute, bridging, and presets. The USP3T communicates to the display module via an asynchronous serial port. Input analog audio enters the module through a 6-pin connector that receives the audio from the input XLR board. Interface to the amplifier uses the PIP Standard (125477 Rev F). All power, communications, and output audio to the amplifier comes through these two Picoflex connectors (J5 & J8). Note that

reference designators on the USP3T are not unique from the amplifier. For example, when referring to U1, one may be referring to an IC on the USP3T or the amplifier. In most cases this document specifies when a reference designator refers to the USP3T.

1.5.1. Gain Structure

The USP3T acts as the input processor to the BCA stage. Recall that the BCA stage has a fixed gain of 20. The gain of the USP3T is configured to ensure that it is capable of driving the amplifier to produce I-T8000 rated 8-ohm power: 2100 W or 129.6 V. Based upon a gain of 20, this requires the USP3T to provide a minimum of (129.6Vrms/20) 6.48 Vrms. To account for tolerances, the USP3T is actually capable of 7.23 Vrms at DAC full scale. 7.23 V corresponds to driving the amplifier 0.95dB beyond full rated power when all tolerances are nominal. Each I-TECH model utilizes identical USP3T modules. The first stage of the I-T6000 and I-T4000 input PWAs attenuate the output of the USP3T to the appropriate level.

Figure 2 shows the gain structure of the entire I-Tech amplifier. The BCA stage, with its 26 dB fixed gain, is labeled as AMP. The gain at each point in the chain is shown along with the full-scale (FS) voltages in Vrms.

The USP3T analog inputs can accept a maximum level of either +15 dBu or +21dB. K1 is used to scale an input voltage of either +15 dBu or +21 dBu to the ADC full-scale value of +2.0 Vrms. Due to the difference in full scale between the ADC input and the DAC output, the DSP portion of the signal chain has an overall loss of 1.73 dB.

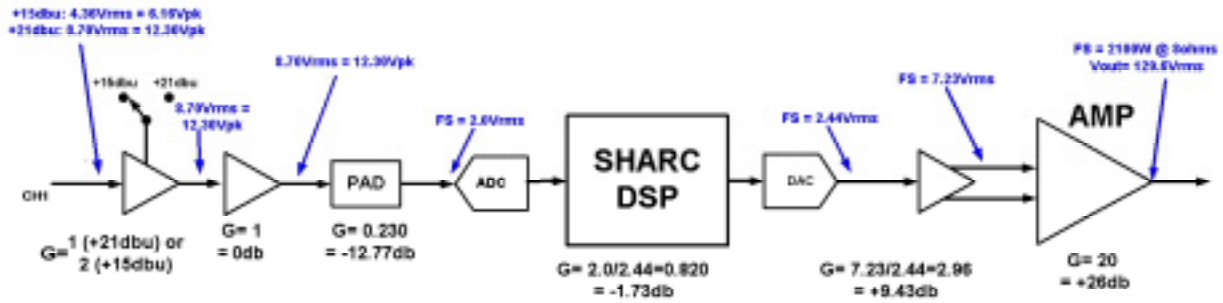

Figure 2. I-Tech Gain Structure

While the gain through the BCA stage is fixed, the USP3T provides user-controlled DSP gain to effectively change the sensitivity and gain of the amplifier. The embedded firmware takes this overall gain structure into account when reporting amplifier gain and sensitivity via the front panel and software. This “digital” gain allows for overall amplifier gain control in 0.1dB steps. Note that the maximum and minimum possible gain settings are different for each max input level setting. For example, 26 dB gain mode is not available when the maximum input level is set to +15dBu. The user must switch to +21dBu maximum input level mode to achieve 26dB of gain.

There are additional sources of gain in the DSP processing that can affect the output level of the amplifier. All of the filters have boost capability as well. The input compressor has makeup gain to compensate for the audio compression. While not stated in the determination of the sensitivity information, these gains need to be realized and taken into account when determining the amplifier output level. Also note that “hidden” digital trim faders are set at the factory to zero out almost all gain error.

1.5.2. USP3T Signal Chain

The USP3T has a 32-bit floating-point DSP engine on board that allows an impressive amount of signal processing to be accomplished. All of the signal processing is available. The DSP monitors the amount of processing available and reports it to the software. Audio sources can be either standard analog audio or AES/EBU. Figure 3 shows the audio path of the USP3T from the inputs to the signal fed to the power-amplifier section of the I-Tech amplifier.

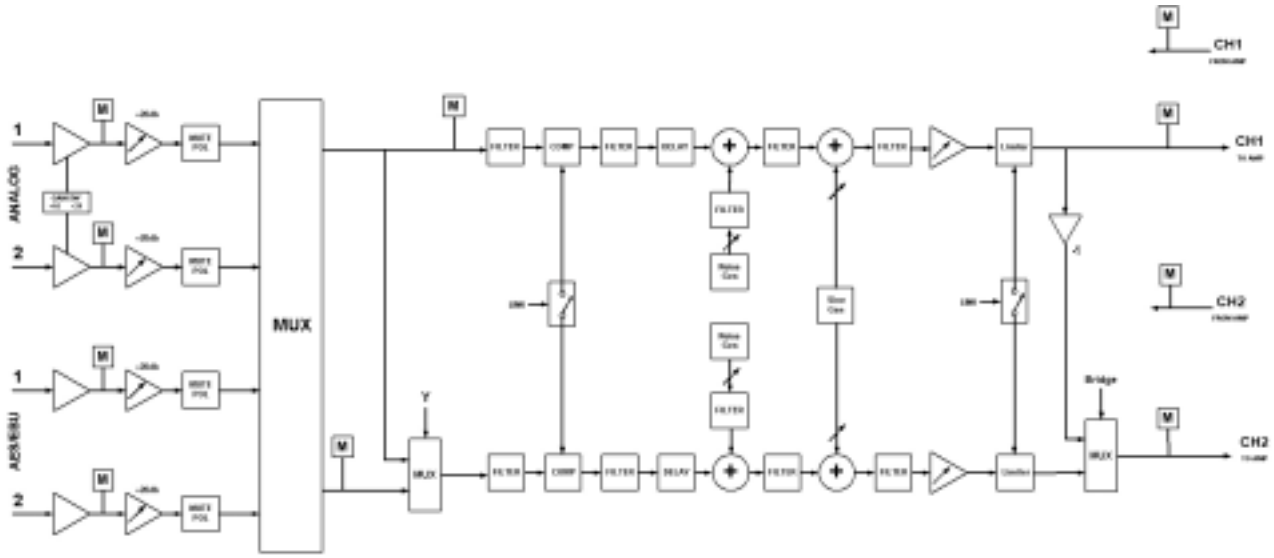

Figure 3. USP3T Audio Processing Chain

Analog Audio: Input audio from the XLR input card is sent to the USP3T, and is buffered and amplified before being sent to the ADC for digitization. A switched gain stage (K1) provides a means of matching the input audio level to the maximum input voltage for the ADC.

Analog Input Gain: Once the audio has passed through the ADC and into the SHARC processor, all of the audio processing is done digitally. The first function in the signal chain is a meter that measures the audio input in relation to ADC full scale and displays both average and peak levels. Following the meter is a gain stage that sets the input sensitivity of the amplifier along with the analog gain stage (+15 dBu/+21 dBu) talked about previously. In addition to gain, this input stage also provides polarity reversal and mute.

AES/EBU Inputs: AES/EBU audio inputs are based upon the AES3 specification that allows two channels of digital audio to co-exist on a single twisted-pair wire. This digital audio standard requires 110Ω twisted-pair cable with XLR connections. The standard calls for up to 24-bit audio at sample rates from 32 kHz to 96 kHz. The sample clock is embedded in the digital audio itself and is extracted from the digital audio stream, and is used to clock the signal.

Both channels of the AES/EBU audio are sent to the SHARC DSP and are available to the digital signal processing chain and the amplifier output.

Input MUX: Four channels of audio, two analog and two AES/EBU, are available to the digital processing signal path. The input MUX determines which two will be used. There are four different options available to the user to determine what audio will be processed and fed to the amplifier output.

- **Analog:** In this mode, audio from the analog inputs (via the ADC) is directed to the signal path. The user can select either analog input channel or a sum of both channels for each of the two amplifier signal-processing chains.
- **AES/EBU:** Rather than the input from the ADC, the user can select the AES/EBU digital audio input. Again, the selection for each channel of the amplifier's signal processing chain can be either of the AES/EBU inputs or a sum of the two.
- **AES/EBU with Analog Override:** AES/EBU audio can be selected with the option of switchover to analog audio if the AES/EBU audio stream is interrupted. The input AES/EBU audio stream is monitored, and if the signal is lost, analog audio will be routed to that amplifier signal-processing chain instead. Once the AES/EBU signal is again sensed, the mux will automatically switch back.
- **AES/EBU with Analog Priority:** In this mode the AES/EBU signal can be overridden by an analog input signal. The threshold of the analog input signal can be set, and once that analog input is sensed, the AES/EBU input is preempted by the analog signal. This mode is particularly useful when a high-priority page is required to override the normal program material.

Another necessary audio routing function is Input Y. In this configuration, a single audio input is required for both amplifier signal-processing chains. When Input Y is selected, the signal that has been chosen for CH1 is routed to CH2 also.

Filters: Filters are allowed to be placed at various points in the signal path. The DSP has capacity of up to 64 single-order filters in the USP3T, and these filters can be of any combination in any location. There are nine different filter choices depending on the requirement. These filters do not add to the overall latency of the amplifier, which is fixed and will be discussed in another section.

Input Compressor: The audio input is set up so that there will be sufficient headroom to allow a 1.4 V input signal to utilize the input compressor. The compressor's threshold, compression ratio, knee hysteresis, and attack & release times are all adjustable. In addition, the compressor provides makeup gain to compensate for the compression of the audio.

In stereo applications where it is important that the relationship between the two channels is maintained, the input compressors can be linked. In this mode, the compressor uses the worst-case compression factor from the two inputs and applies it to both channels.

Delay: In addition to the inherent delay associated with the digitization of the audio signal and its processing, delay can be added to provide time alignment of loudspeakers. Up to 2 seconds of delay per channel can be added in 20.8 us increments.

The overall latency through the amplifier is a combination of several factors:

- **ADC:** The analog-to-digital converter provides 250 us of delay.
- **DSP:** The DSP processes audio in blocks of 16 samples, called bricks. It requires two bricks or 32 audio samples to complete the entire signal processing. This results in a fixed latency of 667 us at the USP3T's 48 kHz audio sample rate. This two-brick latency is fixed and is independent of how much and what type of audio processing is being done.
- **DAC:** The digital-to-analog converter provides 138.5 us of delay.
- **SRC:** The Sample Rate Converter buffers the incoming AES/EBU audio and presents it to the DSP as 48 kHz audio, regardless of the input audio sample rate, which can be from 32 kHz to 96 kHz.

Noise Generator: Two independent noise generators allow either white or pink noise to be inserted into the amplifier's audio processing chain. Each generator has selection of on/off,

white, or pink noise along with a fader to vary the level of noise present. A filter section is available for the noise in order to provide any noise shaping that may be required.

Sine Generator: A sine-wave generator allows a single tone to be inserted into each amplifier audio processing chain. In addition to on/off and frequency, each audio channel's tone level can be independently controlled.

Output Attenuator: The output level of the amplifier's audio processing chain can be attenuated, along with a mute. In addition, there is a "link" function that ties the two channel's attenuators together so that they move in tandem and maintain their relationship to each other.

Output Limiter: The output limiter protects the amplifier from any over-level that could cause damage. As with the input compressor, the output limiters for the two amplifier processing chains can be linked to provide stereo tracking.

- **Average Power Limiter:** This user-controlled limiter looks at the output power of the amplifier and limits it based upon its settings.
- **Peak Voltage Limiter:** Based upon the peak voltage at the amplifier output, this limiter will control the amplifier output on a peak basis to ensure that the voltage present at the loudspeaker does not exceed the user's setting.
- **Thermal Limiter:** Based upon thermal values resident within the amplifier, this limiter controls the output level of the amplifier to protect the amplifier from extreme temperatures that could cause permanent damage. These settings are determined by the design and are not controllable by the user.

Bridging: If the amplifier is to be used in a bridged configuration, the CH1 output is inverted and routed to the CH2 amplifier input. This is controlled by the stereo/bridge control.

Amplifier Output Feedback: The amplifier provides output voltage and current feedback to the USP3T so that output signal level, output limiting, and load impedance can be monitored and controlled.

Error Reporting: Various error conditions can be monitored and reported to the user via the software. Excessive audio clip, thermal, load impedance and line voltage are all available.

1.5.3. USP3T Circuit Description

The USP3T is a highly integrated design with dense Surface Mount Technology circuitry, including Ball Grid Array (BGA) and fine pitch IC's. The center of the design is the Analog Devices ADSP21065L SHARC 32-bit floating point DSP in a 196-pin BGA (U7). All of the digital audio passes into and from the DSP through its serial audio ports. It has its own Synchronous Dynamic Read Access Memory (SDRAM) resources (U21,U24).

A ColdFire MCF5272 32-bit microcontroller (U1) is also a 196-pin BGA and provides all of the communications to the rest of the system. The ColdFire has non-volatile flash memory (U4) and provides the storage for all of the design. A massive Altera Field Programmable Gate Array (FPGA) (U25) acts as the interface between the ColdFire microcontroller and the SHARC DSP. Figure 4 shows the major circuitry blocks of the USP3T and how they interconnect.

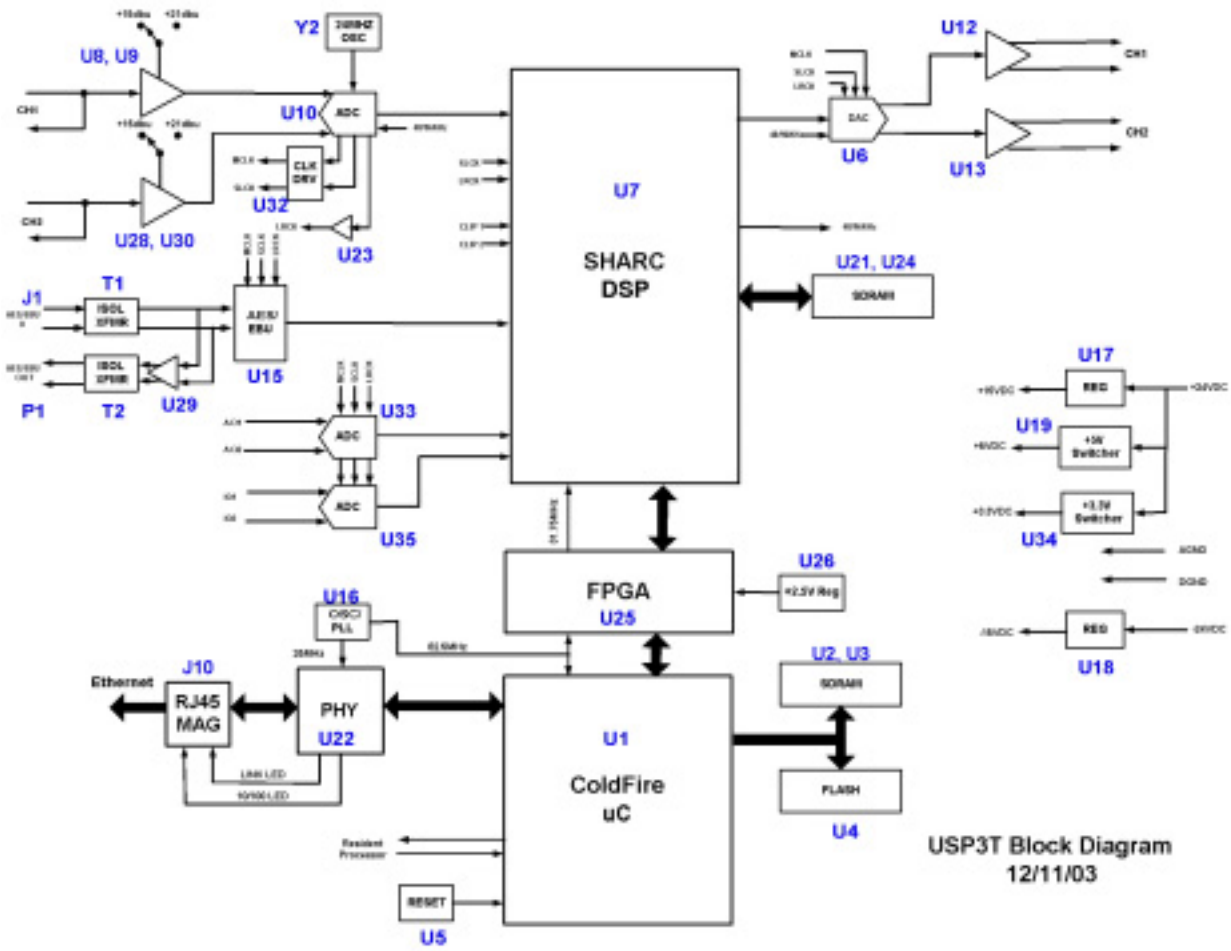

Figure 4. USP3T Block Diagram

Input Audio: The USP3T mates to an XLR card that provides analog audio input with loop-thru capability. Input filtering is integral to the XLR card. Two channels of differential analog audio come onto the USP3T via J6. CH1 input audio flows into the non-inverting amplifier U8-A. This high-impedance input ensures a 10 kΩ source impedance. D3 protects the circuitry from over-levels positive or negative. Relay K1 is controlled from the ColdFire and provides either unity gain (+21 dBu) input or a gain of 2 (+15 dBu). The unity-gain differential input stage of U9-A converts the signal to differential, while U9-B inverts the signal and passes it along to the differential inputs of the ADC (U10). The input to the ADC is AC coupled and resistively divided to provide the maximum 2.0 Vrms into the ADC. A +2.5 VDC bias from the ADC is used to offset the audio. CH2 is identical to CH1.

ADC: The Analog-to-Digital converter (U10) digitizes the input voltage to 24 bits of resolution at either a 48 kHz or 96 kHz rate, dependent upon the control signal FS_SEL from the ColdFire. The digitized I^2S audio stream is input to the DSP.

A 24.576 MHz oscillator (Y2) provides a low-jitter clock to the ADC (U10). The ADC acts as a master and generates the Serial Clock (SCK) at 3.072 MHz and the Left/Right Clock (LRCK) at 48 kHz. The Master Clock (MCLK) and the Serial Clock (SCK) are buffered by a clock driver (U32) and distributed to the other converters and the SHARC DSP. LRCK is buffered by U23-F and U23-H.

The ADC (U10) and the oscillator (Y2) share a local +3.3 V regulator (U31) that provides clean voltage to the input circuitry and clocks.

AES/EBU Inputs: The AES/EBU XLR Input (J1) is AC coupled into an isolation transformer (T1) where it is terminated in 110Ω and sent to the Sample Rate Converter (U15) and an RS485 buffer (U29). The RS485 buffer only serves to re-clock the incoming AES/EBU audio signal and send it back out via isolation transformer (T2) to the AES/EBU loop-thru output (P1).

The Sample Rate Converter (U15) acts as an input buffer and translator. The AES/EBU input differential signal is placed into a buffer. The AES/EBU audio rate clock is extracted from the signal via an internal PLL along with C98, C101, C116, and R14. The AES/EBU audio signal is then sent out at 48 kHz audio rate via I^2S to the SHARC DSP (U7). The SRC's PLL lock signal, RERR, is buffered by U23-D and monitored by the SHARC to ensure that AES/EBU audio is available. If loss of lock is detected by RERR being high, the SHARC mutes the output audio and resets the SRC via /SRC_RST.

DAC: The DAC (U6) receives I^2S audio from the SHARC DSP (U7) and outputs analog audio to a differential amplifier (U12) which provides the necessary gain to take the full-level DAC output signal (2.44 Vrms) and amplify it to the required 7.23 Vrms needed to drive the amplifier to 1dB beyond full rated power out. R51 & R56 work with 0.01uF caps located on the Input board to provide the final pole low-pass filter. Without these caps, the frequency response of the output will have about a 0.5 dB gain at 20 kHz, but will be flat with the cap's inclusion.

The DAC receives MCLK (24.576 MHz), SCK (3.072 MHz), and LRCK (48 kHz) from the clock buffers. The DAC has its own local +3.3 V regulator (U20). In addition, the FS_SEL drives the DAC to either 48 kHz (FS_SEL=L) or 96 kHz (FS_SEL=H) as directed by the SHARC (U7). The DAC is muted during reset, as directed by the /CON_RST line from the SHARC.

Data Acquisition: The amplifier's output voltage and current is scaled to 0 to +10 VDC and sent to the USP3T for monitoring. 24-bit ADC's (U33, U35) digitize these signals at a 48 kHz rate and send I^2S audio to the SHARC (U7) as VO_DATA and IO_DATA. The ADC's are clocked by MCLK, SCK, and LRCK from the clock buffers (U32 & U23-H) and receive their reset signal, /VI_RST, from the SHARC. The analog input voltage and current from the amplifier is reduced and offset by input amplifiers U14 & U27, which provide a 1.4 Vrms level input offset by +2.5 VDC to the ADC inputs.

SHARC: The SHARC DSP (U7) provides all of the digital signal processing for the USP3T. It has no non-volatile memory resources, so it depends upon the ColdFire (U1) communicating via the FPGA (U25) to boot it after reset.

The SHARC's clock, SH_CLK, is a 31.75 MHz clock that comes from the FPGA (U25), with the FPGA providing a divide-by-two function of its input (62.5_MHZ) that it receives from the master oscillator (U16). The SHARC runs internally at twice the SH_CLK frequency, or 62.5 MHz, and accesses its SDRAM (U21, U24) at full 62.5 MHz rate.

After reset, the ColdFire boots the SHARC via the FPGA using the SHARC's host interface port. The ColdFire uses /SH_RST to keep the SHARC in reset. It then loads code into the SHARC, which in turn uses its SDRAM interface to load its code into SDRAM memory, since the ColdFire has no direct access to the SHARC SDRAM.

Once code has been loaded into SDRAM, the ColdFire issues the 'init' command to the SHARC, and the SHARC takes all of the converters out of reset. Once the SHARC has received the "start" command from the ColdFire, it begins processing audio.

Audio is processed in 16 audio samples units, called 'bricks', that are 333 us (16/48 kHz) in duration. The SHARC uses Direct Memory Access (DMA) transfers to move the I^2S audio from the audio serial ports into memory. Once 16 samples (a brick) have been received, the SHARC takes the audio brick and does all of the necessary digital processing and returns it to memory. An additional brick period is required to move the audio out of the output serial port to the DAC, resulting in a two-brick or 667us latency through the DSP.

In addition to the direct digital processing required for each audio sample that is done in bricks, additional side-chain processing for items such as meters, faders, and dynamics are done at 30 Hz in units called frames.

Two LED's associated with the SHARC (E6, E7) indicate the status of the SHARC. Figure 5 shows the meaning of each of the LED's. Figure 6 shows the location of the LED's on the USP3T module.

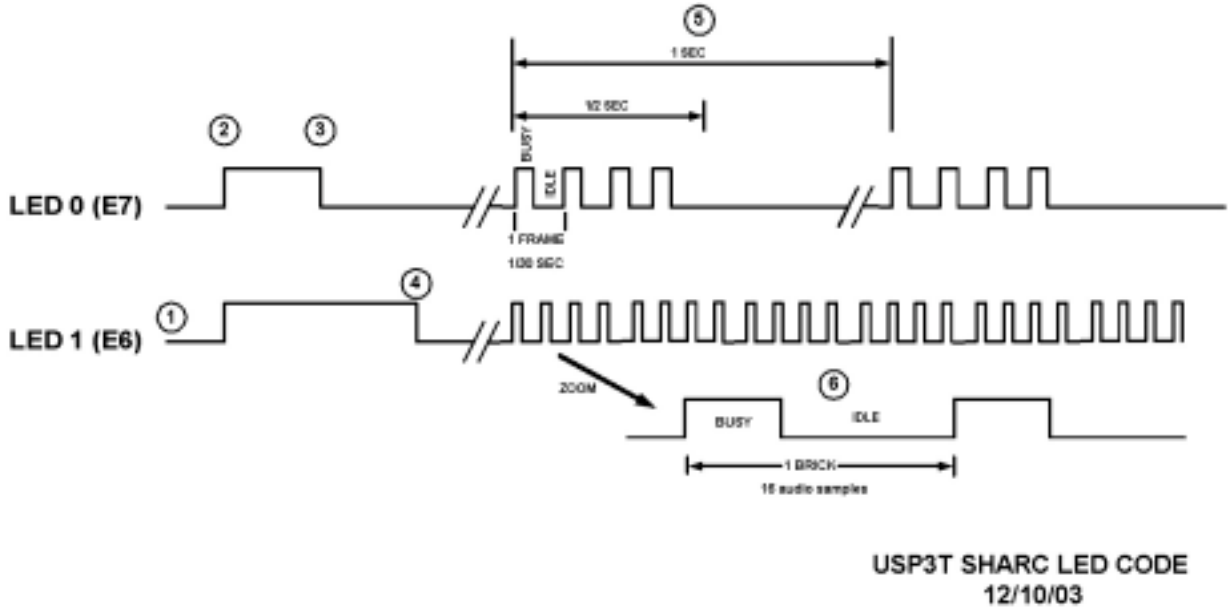

Figure 5. USP3T SHARC LED Function

1. **RESET:** Initially upon reset, both LED's are off, and indicate that the SHARC is in reset and both LED's are off. If neither LED comes on after reset, it indicates communications problems between the ColdFire and the SHARC.
2. **ColdFire Boots SHARC:** Once the ColdFire begins booting the SHARC, both LED's are turned on.
3. **SHARC receives 'INIT' from ColdFire:** Once the ColdFire has completed booting the SHARC, it issues an 'INIT' command, and the SHARC turns LED0 (E7) off and begins bringing up the converters by bringing them out of reset.
4. **SHARC receives 'START' from ColdFire:** Once the SHARC has taken all of the converters out of reset and has begun receiving digital audio via its serial ports, the ColdFire issues the 'START' command and the SHARC turns off LED1 (E6) and begins processing audio.
5. **Frame Processing:** In normal operation, LED0 (E7) indicates the frame audio processing happening at a 30 Hz rate. LED0 cycles at a 1second rate, with the first ½ second showing how much of the 30 Hz frame rate is being used for side-chain processing such as meters, faders, and dynamics. The other ½ second, LED0 (E7) is off.
6. **Brick Processing:** During normal operation, LED1 (E6) indicates that portion of the brick period (333 us) that is being used for audio processing. This signal is used by the SHARC to monitor how much DSP unused resources remain.

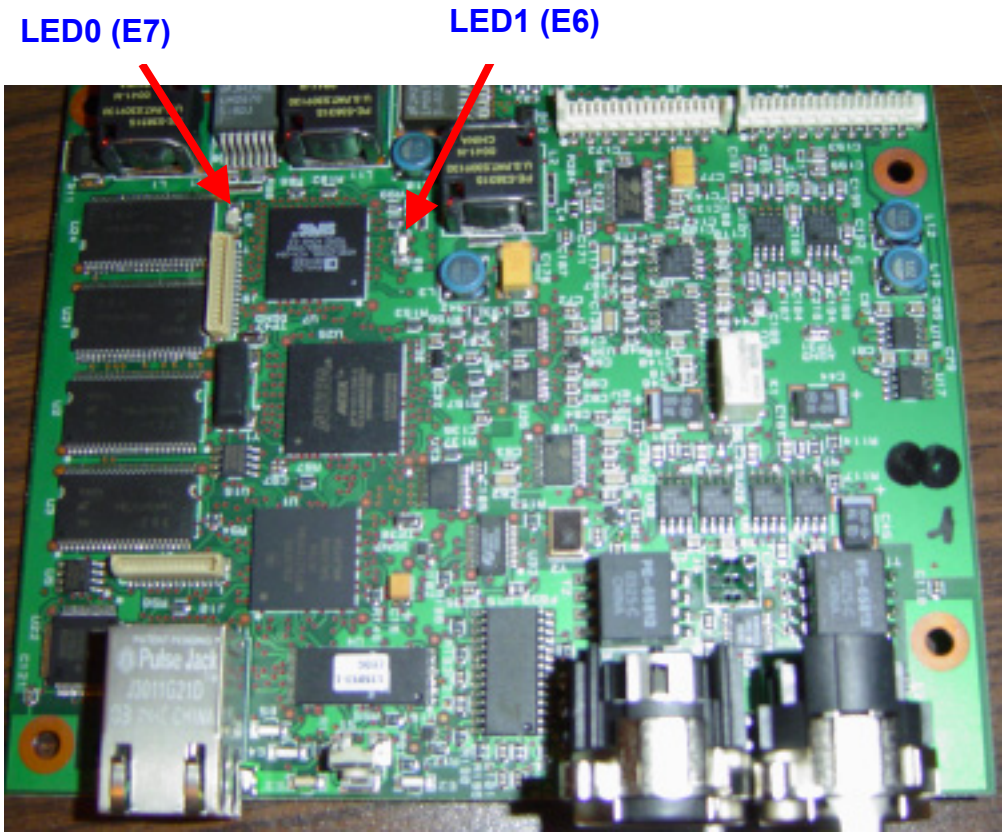

Figure 6. USP3T SHARC LED Locations

FPGA: U25 is a programmable logic device that requires the ColdFire to load its configuration into it each time the unit is reset. The ColdFire uses a serial interface consisting of NSTATUS, NCONFIG, DCLK, CONF_DONE, and DATA0 to load the configuration into U25. The FPGA's internal circuitry runs at +2.5 VDC and utilizes regulator U26 to supply that voltage. Its I/O interface does run at +3.3 VDC and is compatible with both the ColdFire and SHARC. The FPGA acts as the interface buffer between the ColdFire and the SHARC as well as providing other necessary functions between the two, such as division of the ColdFire clock by 2 for the SHARC.

ColdFire: The ColdFire MCF5272 32-bit microcontroller (U1) acts as the central interface, and does all of the external communications, booting, monitoring, and storing of non-volatile variables. It also stores the Ethernet MAC address for the unit. The MAC address is loaded at the factory and is unique for that unit.

A supervisor IC (U5) monitors the +5 VDC and +3.3 VDC supplies and brings the ColdFire out of reset once these supplies have stabilized. When the ColdFire comes out of reset, it selects the external Flash memory (/CS0 of U4) and begins operation. It then begins loading code from flash into SDRAM (U2, U3) and jumps to SDRAM and begins running once loaded.

The ColdFire receives its clock from the master oscillator (U16) that runs at 25 MHz and does a 2.5 PLL multiply to provide a 62.5 MHz output (62.5_MHZ) that is used directly by the ColdFire.

The ColdFire has an onboard MAC controller that interfaces directly with the Fast Ethernet PHY IC (U22). The ColdFire communicates to the PHY via a 4-bit (nibble) interface for both transmit & receive. TXD3:0 and RXD3:0 provide this interface along with interface lines. This interface is initialized and available for communications. The PHY interfaces via the RJ45 connector (J10)

which has the internal magnetics needed for the Ethernet interface. The PHY (U22) uses the 25 MHz clock signal from the master oscillator directly.

The ColdFire then loads code into the FPGA (U25) using the serial interface as described above. Once the FPGA has been loaded and is functioning, the ColdFire communicates with the SHARC DSP (U7) via its Host Interface Port and proceeds to boot the SHARC as described before. Once the SHARC is running, the ColdFire processor periodically communicates with the SHARC via the FPGA to get audio status information and to change audio processing objects as ordered via the software (Ethernet) or front panel (serial port).

The ColdFire has an internal watchdog timer (WDT) that periodically needs to be written to. If the ColdFire watchdog fails to be written within a certain period, it assumes that the firmware has malfunctioned and will provide a software reset to the ColdFire.

A switch (S1) is available via the rear panel and can be used to select a preset. In addition, if the switch is depressed during reset, then held for ~5sec after the ColdFire comes out of reset, the ColdFire will boot with its flash-based bootloader code that will allow the ColdFire to communicate via the Ethernet and load code. This is a good diagnostic tool to use to ensure that the ColdFire is indeed booting from flash and communicating via the Ethernet port. Since the flash bootloader does not get overwritten when new firmware is loaded, it is available should something happen to the code in flash and should always be available for use.

Two LED's (E4, E5) are used by the ColdFire during normal operation to indicate the presence of Ethernet traffic with one showing incoming Ethernet packets and one showing the presence of outgoing packets. The Data LED (E3) blinks each time Ethernet communications occur or if directed via the software. The preset LED (E2) blinks to indicate which preset is currently active.

Power Supplies: The USP3T receives +/-20 VDC from the amplifier and converts it into the voltages needed by its circuitry. It uses ~250 mA from +20 VDC and ~40 mA from –20 VDC.

- **+15VDC Regulator (U17):** This linear regulator provides the ~40 mA of current needed by the op amps for the input and output amplifiers for the audio and data acquisition.
- **-15VDC Regulator (U18):** Just like the +15 V supply, this regulator takes the –20 VDC and provides the low noise –15 VDC @ 40 mA required by the audio op amps.
- **+3.3VDC Switching Regulator (U34):** This switching regulator takes the +20 VDC from the amplifier and converts it to +3.3 VDC @ 2A for the digital circuitry. The input voltage from the amplifier is filtered by L11 to ensure that amplifier noise is kept from the USP3T and that digital switching noise is kept from the amplifier. The switcher gets its sync from the ColdFire, which switches it at ~300 kHz that is locked to the ColdFire's 62.5 MHz clock. Upon reset, the switcher free-runs at ~260 kHz until it receives sync signals from the ColdFire.
- **+5VDC Switching Regulator (U19):** Like the +3.3 V regulator, the input +20 VDC is filtered and switched by the regulator. It receives its sync from the ColdFire and free-runs at reset just like the +3.3 V supply.
- **+2.5VDC Linear Regulator (U26):** As discussed in the FPGA section, this low dropout regulator (LDO) takes the +3.3 V supply and provides +2.5 V to the internal circuitry of the FPGA.

1.5.4. USP3T Boot Sequence

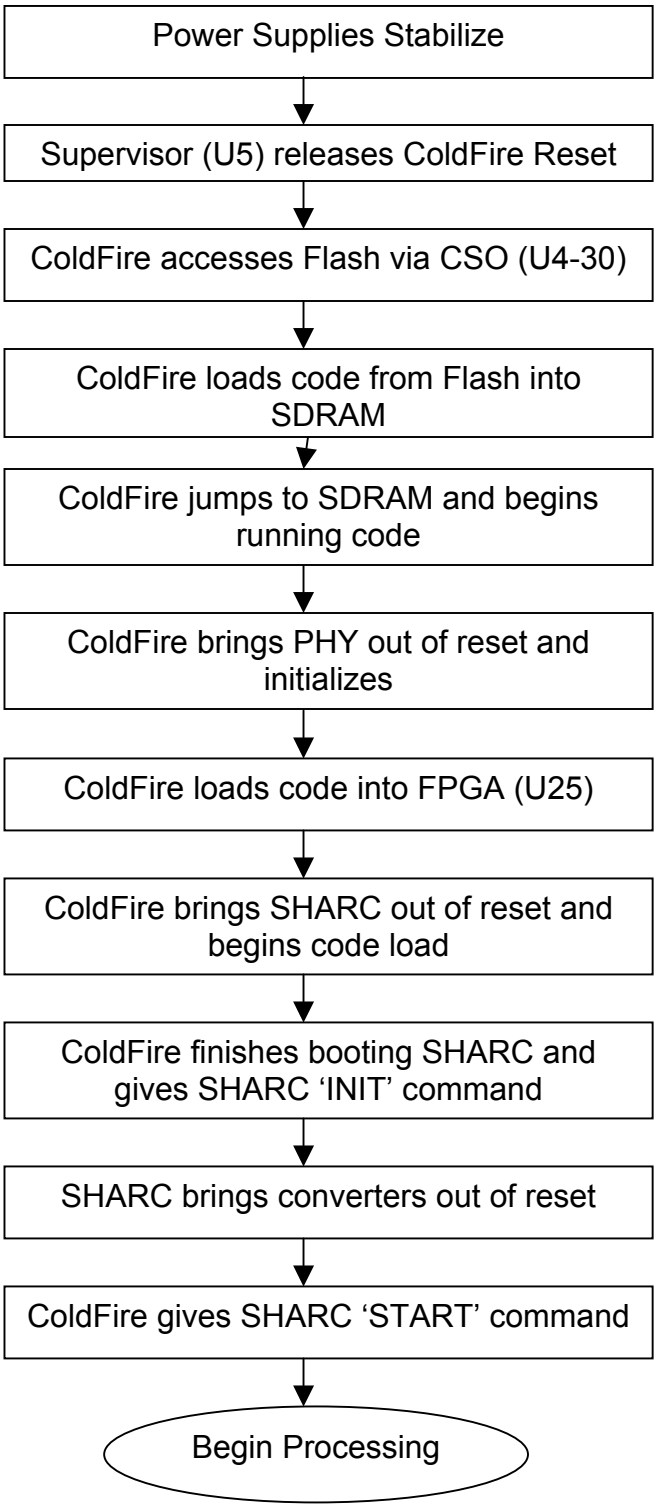

1.5.5. Troubleshooting Tips

Check the Power Supplies: +20 VDC from amp first, then +/-15 V, then +3.3 VDC, +5 VDC, +2.5 VDC. Remember that the converters have their own local +3.3 V regulators.

Check ColdFire Reset: Ensure that the supervisor IC (U5-7) is taking the ColdFire out of reset.

Check ColdFire access of Flash: Ensure that ColdFire is going out and accessing Flash by monitoring U4-30 (/CS0) with a scope.

Place ColdFire into Bootloader Mode: Power up the unit by holding the preset switch (S1) down during power-up and for ~5sec until both the Preset and Data LED's begin to flash. If you are able to place the unit in bootloader mode, you know that power supplies are up, the ColdFire is running and able to run from flash.

Try TCPIQUTIL to discover unit in Bootloader Mode: If the unit will boot in bootloader mode, use TCPIQUTIL to try and discover it. If it discovers it, you know that the Ethernet PHY and interface is working.

Try and load code into unit via Ethernet: Use TCPIQUTIL to try and load code into flash. If successful, you know that the ColdFire is working with the flash successfully.

FPGA & SHARC Load: If both SHARC LED's light, then the ColdFire was able to access the SHARC and the FPGA is working.

1.6. Firmware

I-TECH amplifiers include multiple pieces of firmware:

- One loader for each processor
- One application program for each processor
- One virtual EEPROM

1.6.1. Loader Firmware

Both processors require firmware called a "loader". A loader allows new application firmware to be loaded from the network connection. They are programmed by the factory. If needed, the loaders themselves can be reprogrammed through the network connection. Generally, however, there is not a need to do so. If it becomes necessary to reprogram a loader, care should be taken. A communication error during loader download can require that the unit be opened and re-programmed with special tools.

1.6.2. Application Firmware

The firmware that is generally associated with the product's operation is called application firmware. This firmware can also be updated through the network connection. The USP3T and display processor each have a unique file. Each amplifier is shipped with the latest revisions. However, from time to time improvements are made. When this occurs, Crown will make firmware upgrades available. If a communications error occurs during an application firmware upgrade, simply reattempt the download. Application firmware download errors do not cause the same problems that loader errors do.

1.6.3. Virtual EPROM Firmware

Each amplifier is factory programmed with virtual EPROM firmware. The virtual EPROM is used to store factory-set constants, model number, serial number, and many other items important to I-TECH's operation.

I-Tech Service: Start Here

Documentation, Check-out, and Troubleshooting Procedures

Notice: This information is the property of Crown International and may not be reproduced, sold, transmitted, or shared in any form without approval. Proprietary information is contained within this document and is intended only for the use of those troubleshooting and servicing Crown I-Tech series amplifiers.

1. Introduction

This document describes the I-Tech series of amplifiers, repair and service documentation, checkout/tuning procedures, and troubleshooting tips. It provides a starting point for learning about the amplifier and how to diagnose, repair, and troubleshoot problems.

This document is intended to assist you in determining which of the other technical support documents are needed to solve a particular problem.

The information in this document is intended for use by qualified, factory authorized Crown technicians.

IMPORTANT: Because I-Tech uses a switching amplifier stage, some traditional audio measurement techniques may no longer be adequate. Issues are of concern are listed below:

1) Ultrasonic output may overload test equipment

Some amount of high-frequency energy is present at the output. Although this energy is inaudible and not able to drive a loudspeaker, it may overload some voltmeters, distortion analyzers, or other test equipment. Therefore, if you are obtaining unusual or confusing measurements, try a different meter or insert a 20kHz lowpass filter before the meter. Audio Precision and other companies make filters designed for this purpose.

2) I-Tech specs are measured *with load connected* to the amplifier

The Class-I switching output used in I-Tech has frequency response characteristics that vary with load impedance above approximately 16kHz. These are caused by the output filter which removes ultrasonic switching energy from the audio.

For this reason, you *must* make high-frequency measurements with a load (speaker or resistor) connected to the amplifier.

Example: If you set a reference level at 1kHz and measure unloaded output voltage at 20kHz, you will see an increase in the voltage. If you then apply an 8 ohm resistive load the voltage will drop to a lower value very close to that seen at 1kHz.

Example: If you try to sweep frequency response with no load attached, you will see a rise in response above 16kHz. With a load connected, this rise is significantly less pronounced. The effect is larger in IT8000 when compared to IT6000 and IT4000.

3) I-Tech has onboard DSP

Perhaps this seems obvious, but the first time you attempt to measure square waves you will find them somewhat rounded at the output when compared with other amplifiers. This is caused by the Nyquist cutoff frequency of the DSP at 22kHz and not the amplifier.

If you made the same measurement with an external speaker processor and amplifier *as a system*, you would get similar results. Even if DSP is turned completely off, you will see this behavior.

The slew rate of I-Tech is fast enough to support a 20kHz transient at the full voltage capability of the amplifier. Measuring square wave response is not generally indicative of performance in a Class-I (switching) amplifier design.

4) I-Tech has fixed latency

For many audio measurements, you must account for the amplifier signal latency as shown below. The latency does not change regardless of DSP filter settings, it is the same when using zero filters or 64 filters.

Analog Inputs: 1.13mS

Digital Inputs:

32 KHz	2.744 ms
44.1 KHz	2.358 ms
48 KHz	2.275 ms
96 KHz	1.807 ms

The varying latency when using digital inputs is caused by the onboard sample rate converter, which converts all incoming digital audio to 48kHz .

2. General description of the amplifier

I-Tech amplifiers are based on Crown's patented Class-I amplifier technology, DSP, and networking. These are coupled with decades of experience in power electronics design to produce an amplifier unlike any other.

Four US and Worldwide patents cover the Class-I technology used in I-Tech, and two other patents are pending.

The result is the highest power density in the world. I-Tech amplifiers deliver real, Crown watts, on the bench and in the field, and they do it with less power from the AC mains. All specs are conservatively rated.

2.1 Amplifier Block Diagram Discussion

Refer to the overall I-Tech block diagram. Fourteen PWA's make up the amplifier. These are:

(1) Main Amp PWA	(1) Output Filter PWA
(2) Front End (Modulator) PWAs	(2) Amplifier Gate Drive PWAs
(1) DSP (USP3T)	(1) Analog XLR Board
(1) Input PWA	(1) Display PWA
(1) EMI/Flyback PWA	(1) Main Power Supply PWA
(2) Power Supply Gate Drive	

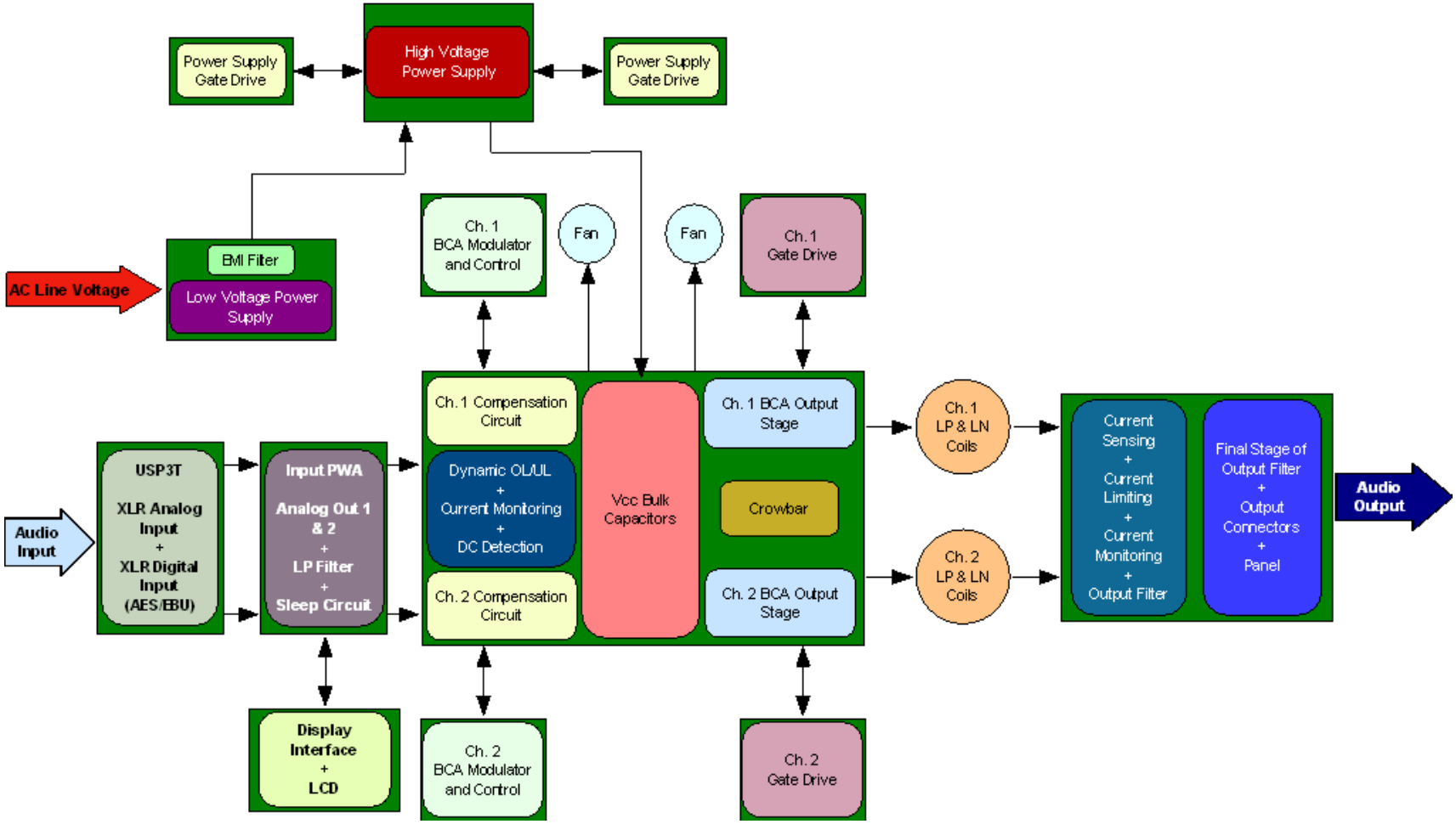
Power Supply Gate Drive
High Voltage Power Supply
Power Supply Gate Drive
AC Line Voltage
EMI Filter
Low Voltage Power Supply
Ch. 1 BCA Modulator and Control
Fan
Fan
Ch. 1 Gate Drive
Audio Input
USP3T
XLR Analog Input
+
XLR Digital Input (AES/EBU)
Input PWA
Analog Out 1 & 2
+
LP Filter
+
Sleep Circuit
Ch. 1 Compensation Circuit
Dynamic OL/UL
+
Current Monitoring
+
DC Detection
Ch. 2 Compensation Circuit
Vcc Bulk Capacitors
Ch. 1 BCA Output Stage
Crowbar
Ch. 2 BCA Output Stage
Ch. 1 LP & LN Coils
Ch. 2 LP & LN Coils
Current Sensing
+
Current Limiting
+
Current Monitoring
+
Output Filter
Final Stage of Output Filter
+
Output Connectors
+
Panel
Audio Output
Display Interface
+
LCD
Ch. 2 BCA Modulator and Control
Ch. 2 Gate Drive

General Similarities and Differences

Spec/Characteristic	**IT4000**	**IT6000**	**IT8000**
Amp switch frequency	250kHz	250kHz	200kHz
Amp 2CLK	500kHz	500kHz	400kHz
Amp 4CLK	1MHz	1MHz	800kHz
Main Crystal Frequency	4.0MHz	4.0MHz	3.2MHz
Main Amp FETs	FQP17N40	IRFB20N50K	IRFB20N50K
Bulk Capacitor Voltage	200WVDC	200WVDC	220WVDC
Lp/Ln Coils	11.1uH+11.1uH	11.1uH+11.1uH	15uH+15uH
PS switch frequency	80kHz	80kHz	80kHz
±Vcc (nominal)	160V	180V	200V

3. How documents are organized

3.1. PWA Documents

3.1.1. PWA (printed wiring assembly) documents provide schematic diagrams, component part numbers, and component reference designators.

3.1.2. The amplifier is built from four large PWA panels, which are broken into individual boards during assembly. The part numbers and corresponding PWA names are listed below. In the case of a conflict between this document and PWA documents, the PWA documents should supercede.

I-TECH PWA STRUCTURE

BOARDS -4 AND LOWER ARE X MODELS

USP3T	136871-6	PWA, USP3T Main

ITECH 4000			
6K/4KP1	137067-4A, 5A, 6A, 7A	PWA, I-Tech 4k/6k Display	
	137067-4B, 5B, 6B, 7B	PWA, I-Tech 4k/6k Front End	After -7, IT4k and IT6k have unique Front End PWAs
4KP1	138029-1A	PWA, I-Tech 4k Display	
	138029-1B	PWA, I-Tech 4k Front End	
4KP2	137075-4A, 5A, 6A, 7A, 8A, 9A, 10A, 11A	PWA, I-Tech 4k Amp	
	137075-4B, 5B, 6B, 7B, 8B, 9B, 10B, 11B	PWA, I-Tech 4k Gate Drive (Amp)	
	137075-4D, 5D, 6D, 7D, 8D, 9D, 10D, 11D	PWA, I-Tech 4k Output Filter	
	137075-4E, 5E, 6E, 7E, 8E, 9E, 10E, 11E	PWA, I-Tech 4k Input	
	137075-4F, 5F, 6F, 7F	PWA, I-Tech 4k Gate Drive (Power Supply)	Moved to panel 3 starting with -8
	137075-4H, 5H, 6H, 6H, 8H, 9H, 10H, 11H	PWA, I-Tech 4k PIP XLR	
4KP3	137101-4A, 5A, 6A, 7A	PWA, I-Tech 4k Power Supply Main	-5 and lower also contain "D" and "E", Lp/Ln coil PWAs
	137101-4B, 5B, 6B, 7B	PWA, I-Tech 4k EMI	
	137101-4C, 5C, 6C, 7C	PWA, I-Tech 4k Power Supply Control	
4KP3	137101-8A	PWA, I-Tech 4k Power Supply Main	
	137101-8B	PWA, I-Tech 4k EMI	
	137101-8C	PWA, I-Tech 4k Power Supply Control	
	137101-8D	PWA, I-Tech 4k Gate Drive (Power Supply)	Moved from panel 2 starting with -8

		Desc	Comment
ITECH 6000			
6K/4KP1	137067-4A, 5A, 6A, 7A	PWA, I-Tech 4k/6k Display	
	137067-4B, 5B, 6B, 7B	PWA, I-Tech 4k/6k Front End	Starting with -8, IT4k and IT6k have unique Front End PWAs
6KP1	137464-1A	PWA, I-Tech 6k Display	
	137464-1B	PWA, I-Tech 6k Front End	
6KP2	137074-4A, 5A, 6A, 7A, 8A, 9A, 10A, 11A	PWA, I-Tech 6k Amp	
	137074-4B, 5B, 6B, 7B, 8B, 9B, 10B, 11B	PWA, I-Tech 6k Gate Drive (Amp)	
	137074-4D, 5D, 6D, 7D, 8D, 9D, 10D, 11D	PWA, I-Tech 6k Output Filter	
	137074-4E, 5E, 6E, 7E, 8E, 9E, 10E, 11E	PWA, I-Tech 6k Input	
	137074-4F, 5F, 6F, 7F	PWA, I-Tech 6k Gate Drive (Power Supply)	Moved to panel 3 starting with -8
	137074-4H, 5H, 6H, 7H, 8H, 9H, 10H, 11H	PWA, I-Tech 6k PIP XLR	
6KP3	137098-4A, 5A, 6A, 7A	PWA, I-Tech 6k Power Supply Main	-5 and lower also contain "D" and "E", Lp/Ln coil PWAs
	137098-4B, 5B, 6B, 7B	PWA, I-Tech 6k EMI	
	137098-4C, 5C, 6C, 7C	PWA, I-Tech 6k Power Supply Control	
6KP3	137098-8A	PWA, I-Tech 6k Power Supply Main	
	137098-8B	PWA, I-Tech 6k EMI	
	137098-8C	PWA, I-Tech 6k Power Supply Control	
	137098-8D	PWA, I-Tech 6k Gate Drive (Power Supply)	Moved from panel 2 starting with -8
ITECH 8000			
8KP1	136547-4A, 5A, 6A, 7A, 8A	PWA, I-Tech 8k Display	
	136547-4B, 5B, 6B, 7B, 8B	PWA, I-Tech 8k Front End	
8KP2	136541-4A, 5A, 6A, 7A, 8A, 9A, 10A, 11A	PWA, I-Tech 8k Amp	
	136541-4B, 5B, 6B, 7B, 8B, 9B, 10B, 11B	PWA, I-Tech 8k Gate Drive (Amp)	
	136541-4D, 5D, 6D, 7D, 8D, 9D, 10D, 11D	PWA, I-Tech 8k Output Filter	
	136541-4E, 5E, 6E, 7E, 8E, 9E, 10E, 11E	PWA, I-Tech 8k Input	
	136541-4F, 5F, 6F, 7F	PWA, I-Tech 8k Gate Drive (Power Supply)	Moved to panel 3 starting with -8
	136541-4H, 5H, 6H, 7H, 8H, 9H, 10H, 11H	PWA, I-Tech 8k PIP XLR	
8KP3	137095-4A, 5A, 6A, 7A	PWA, I-Tech 8k Power Supply Main	-5 and lower also contain "D" and "E", Lp/Ln coil PWAs
	137095-4B, 5B, 6B, 7B	PWA, I-Tech 8k EMI	
	137095-4C, 5C, 6C, 7C	PWA, I-Tech 8k Power Supply Control	
8KP3	137095-8A	PWA, I-Tech 8k Power Supply Main	

3.2. Assembly Documents

3.2.1. "Exploded View" assembly documents show the entire amplifier assembly. These documents also specify torques, fasteners, packing materials, and other product-level characteristics. These are found on the Crown Service web site as shown:

3.2.1.1. IT4000 Assembly Drawing: 137682
3.2.1.2. IT6000 Assembly Drawing: 137683
3.2.1.3. IT8000 Assembly Drawing: 137684
3.2.1.4. I-Tech Packaging Assembly (all models): 137879

3.3. Theory of Operations

3.3.1. Two detailed theory of operations documents are available on the Crown service website. One is written for the power supply and one covers all other sections of the amplifier. The documents contain valuable troubleshooting and design information, and should be consulted along with this document when repairing or troubleshooting the amplifier.

3.4. Compatibility Information

3.4.1. In general, different versions of I-Tech PWAs are compatible. However, some differences do exist. The compatibility matrix documents highlight these differences and in most cases explain where component values changed.

3.4.2. If you need assistance with a PWA compatibility issue, feel free to contact Crown Technical Support.

4. Checkout and tuning procedures

4.1. I-Tech amplifiers require only limited adjustment and calibration.

IMPORTANT: The procedures listed below should be performed after any I-Tech amplifier repair. Failure to perform these procedures properly will result in reduced output power, excessive heat dissipation, incorrect system gain, or other problems.

WARNING: The outputs of this amplifier can produce LETHAL energy levels! Be very careful when making connections. Do not attempt to change output wiring until the amplifier has been off at least 10 seconds.
WARNING: This unit is capable of producing high sound pressure levels. Continued exposure to high sound pressure levels can cause permanent hearing impairment or loss. User caution is advised and ear protection is recommended when using at high levels.
WARNING: Do not expose this unit to rain or moisture.
WARNING: Only properly trained and qualified technicians should attempt to service this unit. There are no user serviceable parts inside.
WARNING: When performing service checks with the power off, discharge the main power supply filter capacitors fully before taking any measurements or touching any electrical components. A 300-ohm 50-W resistor is recommended for this. Hold the resistor with pliers, as the resistor may become extremely hot.

WARNING: Under load, with a sine wave signal at full power into both channels, the amplifier may draw in excess of 100 amperes at 120V from the AC service mains.
WARNING: Heatsinks are not at ground potential. Simultaneously touching either heatsink and ground, or two heatsinks will cause electrical shock.
CAUTION: Eye protection should be worn at all times when protective covers are removed and the amplifier is plugged in.
CAUTION: When performing tests in Section 4.1 that require a load, the load must be resistive to 20kHz and must be capable of handling 500 W (per channel). Full power tests require a load capable of 4000 W per channel.
CAUTION: Disconnect the power cord before installing or removing any cover or panel.
CAUTION: Electrostatic discharge will destroy certain components in the amplifier. Technicians must have approved ESD protection. Proper grounding straps and test equipment are required.

4.1.1. Equipment Required

- **Digital Multimeter:** Agilent 34401 or equivalent same model meters with 1% accuracy minimum to 20kHz. Less accurate meters will need to be taken into account in the measurements.
- **Oscilloscope:** TEKTRONIX type TDS420A or capable of 50ns/div and –120dc offset control, X10 probe.
- **Test Load:** 8.0 ohm +/-1% , non-inductive or 2 deg @ 20kHz, 4000W
  - Note: Resistive loads not within above ranges will need to be accounted for in measurements. Inductance in loads or long wiring to loads will cause more droop at 20kHz for the reverse EQ than normal.
- **Signal Generator:** Agilent 33120 or similar. Capable of 50 ohm output drive, or 50 ohm mode at all times.

4.1.2. Current Monitor (IMON)

4.1.2.1. If IMON won't calibrate, check the output speakon connectors and ensure they are installed correctly on the PWA

4.1.2.2. <u>ITECH 4000 and ITECH 6000</u>

4.1.2.2.1. Apply input signal to produce 1kHz sine 20Vrms –0/+1% Vout into 8 ohm load in a channel. The 8 ohm load should be +/-1% resistive.

4.1.2.2.2. Adjust IMON pot located on the Front End card of the channel to be adjusted and measure on TJ1000 w/ probe (Ground on AGND3 test point) w/ labeling showing IMON 1 or IMON 2. Adjust Vrms measured by the multimeter to 0.5V +/-1% ac.

4.1.2.3. <u>ITECH 8000</u>

4.1.2.3.1. Apply input signal to produce 1kHz sine of 24Vrms –0/+1% Vout into the 8 ohm load.

4.1.2.3.2. Adjust IMON pot located on the Front End card of the channel to be adjusted and measure on TJ1000 w/ probe (Ground on GND3 test point) w/ labeling showing IMON 1 or IMON 2. Adjust Vrms measured by the multimeter to 0.5V +/-1% ac.

4.1.3. Input Filter Traps

4.1.3.1. No adjustments are required to the pots labeled 2Fs or 4Fs on the front end board. These are set at the factory. PWA versions –6 and higher have these pots removed entirely.

4.1.4. Reverse EQ

4.1.4.1. Apply sine 1kHz input signal to respective channel and adjust level or volume to measure 2.83 Vrms at the output terminated into the 8 ohm load (1 watt).

4.1.4.2. While maintaining volume and generator levels, adjust the generator frequency to 20kHz.

4.1.4.3. I-Tech 4000/6000: Adjust channel EQ pot (the USP3T will have to be lifted) R848 for Channel 1 and R920 for channel 2 on the input PWA. Adjust channel pot to be within 2.75Vrms of the 2.83V 1kHz point at 20kHz.

4.1.4.4. I-Tech 8000: Adjust channel EQ pot (the USP3T will have to be lifted) R848 for Channel 1 and R920 for channel 2 on the input PWA. Adjust channel pot to be within 2.71Vrms of the 2.83V 1kHz point at 20kHz.

4.1.5. Overlap/Underlap

4.1.5.1. IMPORTANT: Prior to power up once any Gate Drive PWA has been replaced, re-center the associated pots, R1034 and/or R1006. Fully discharge the main power supply rails prior to PWA removal.

4.1.5.2.In the case where the newer BCA Gate Drive PWA must be used, check the following on the MAIN PWA and Gate Drive PWA:

4.1.5.2.1. Base part number and dash matches. No change needed.

4.1.5.2.2. If a newer BCA Gate Drive PWA (having the red capacitors) has to be used on an older dash version MAIN PWA, then the following MAIN PWA resistors located around the pot need to be checked and changed to what the newer MAIN PWA is; CH1; R1003=open,R1004=715K (R1006=pot) CH2; R1031=open,R1032=715K (R1034-pot)

4.1.5.2.3. Attach X10 probe (ground clip not needed) to respective channel on the buss bar the red LP/LN wire is, orienting the probe vertical and NOT leaning against the gate drive PWA. See Figure.

4.1.5.2.4. Power up from a cold start (i.e. 20-25 degrees C) ,and adjust associated OVER LAP / UNDER LAP pot from center.

4.1.5.2.5. Adjust the scope timebase for 50ns/div, 20V/div and tune scope offset and position until the rising, upturn corner of the waveform is in center view.

4.1.5.2.6. While viewing the active wave on the scope, adjust the channel pot, watching this corner change from a more rounding feature to just starting to square off some. Stop tuning there, so the wave is more like the photo having a slight round corner, not too square. The fans may come on which is ok but , since the unit is open thus heating is more rapid, *it is recommended that the adjustment is done within 2 minutes from a room ambient temperature start.*

4.1.5.2.7. *Alternate, less accurate method:* If an AC power meter is available, then a power line draw check may be a measurement to ensure one of the two channels isn't consuming the majority of line power sum of the channels.

4.1.5.2.8. For example using an ITECH 6000: Using a line voltage of 120VAC 60Hz, connect an ITECH 6K thru a power meter. With the front panel switched off and turning on the back breaker, a typical power demand read on the meter might be around 5 watts (reduce readings by 50% for 240V measurements). Then, turning on the front panel power switch, and while waiting for the green "ready" lights to come on the power meter should respond up to about 50 to 60 watts briefly. This is the internal high power supply coming on line before the two channels of the amplifier become awake. Then when the green "ready" lights come on the power meter should then go from the 60 watts to about 190 watt or very low 200 watt range. Here both channels are on line plus the power supply.

4.1.5.2.9. Turn off the back breaker and then pull out <u>one</u> of the channel Front End PWAs. Turn back on the back breaker and wait for the "green" ready lights to come back on. The power meter would then go from the 60 watts (power supply only) to about 120 watts or so approximate (only one amplifier channel running). Turn off again, replace the first front end PWA and remove the other. If the power readings are within than 20 watts of each other then Over/Under Lap is set properly for each.

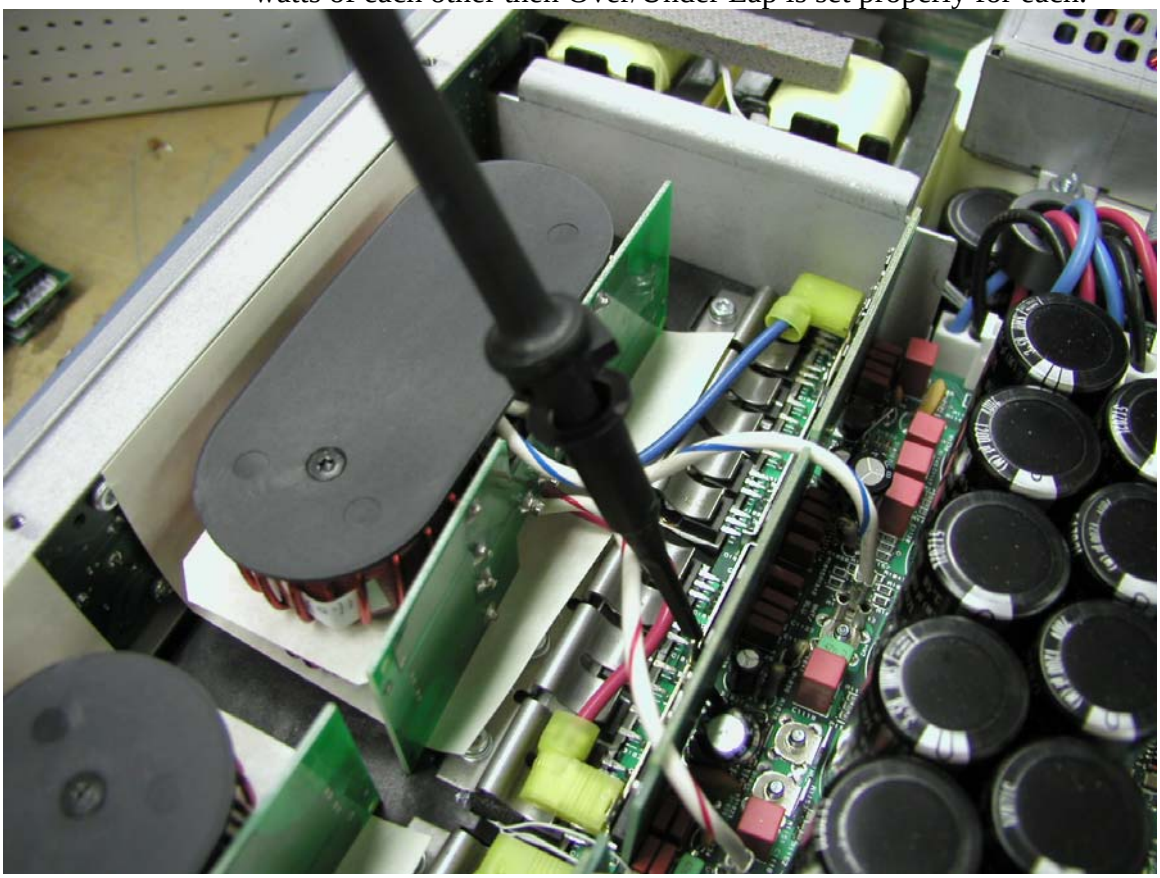

Over-Lap/Under-Lap probe placement and scope reference of VP(red) node.

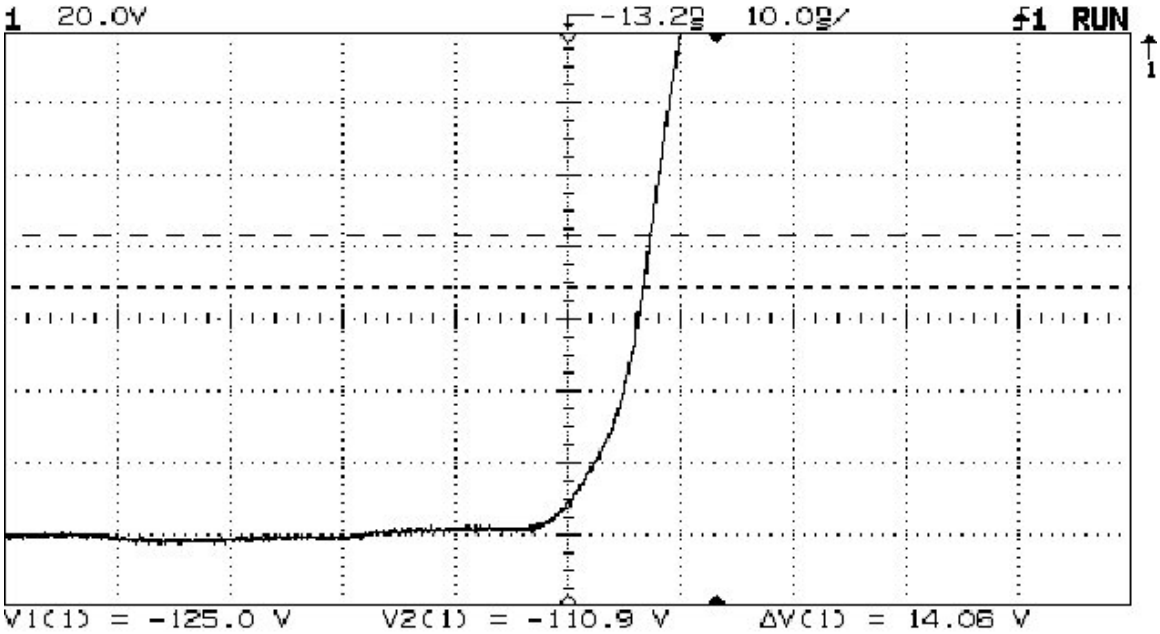

Scope display showing proper adjustment of overlap/underlap

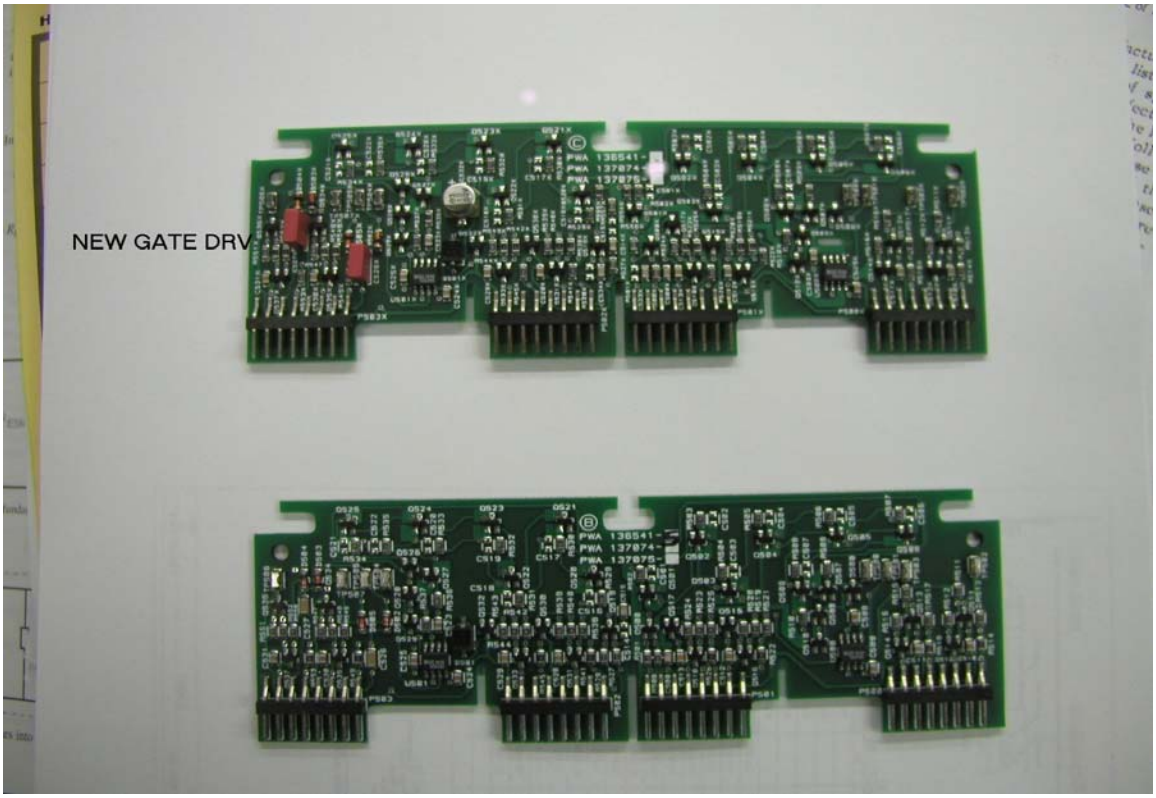

Upper BCA Gate Drive is new (red) capacitors. Lower one is the original.

4.1.6. Firmware Upgrade / Version Check

4.1.6.1. There are several types of firmware files used in I-Tech amplifiers. Firmware is updated using TCP/IQ utility or System Architect. Firmware versions may be verified using either software package, or via front panel LCD in the "Monitor" menu.

Here are the firmware files used in I-Tech.

4.1.6.1.1. Loader: allows network to send new firmware to I-Techs. Filename - Italdr.bin.

4.1.6.1.2. LCD firmware: controls LCD and front panel. Filename - ITDAPP-vx_xxx.bin.

4.1.6.1.3. DSP firmware: handles all audio processing and network communications. Filename - ITAxxxx.bin.

4.1.6.2. What version firmware should I be using?

4.1.6.2.1. Version 1.202 or higher. Older versions do not contain important feature and performance enhancements, such as quieter fan operation, optimized thermal compression, etc.

4.1.6.2.2. As a general rule, if the amplifier is running 1.202 or higher, there is no reason to upgrade unless you require specific features contained in the new version.

4.1.6.3. If you have problems loading new firmware

4.1.6.3.1. Turn the amplifier off. Hold both encoders down and turn the amplifier on. This will force the amplifier into "bootloader" mode and allow you to re-send firmware.

4.1.6.4. <u>Important notes about updating firmware</u>

4.1.6.4.1. You should always update DSP and Display firmware at the same time, to the same version level. Other combinations of Display and DSP firmware have not been tested together.

4.1.6.4.2. Updating the loader is not always required. When updating the loader, do NOT interrupt the AC mains or stop the process.

5. Troubleshooting and repair tips

5.1. **All troubleshooting should begin with a careful assessment of the amplifier assembly. On all amplifiers, *check and verify the following items***:

5.1.1. **Correct PWAs**: All PWA numbers and versions are correct for the model amplifier you are repairing

5.1.1.1. Example: Check for IT8000 parts in an IT6000 or IT4000

5.1.1.2. Example: Check Lp/Ln coils for correct part number. IT4000 and IT6000 use the same coils, IT8000 uses different coils.

5.1.2. **Firmware**:

5.1.2.1. Verify firmware versions are V1.202 or higher. See Section 4.1.6.

5.1.2.2. Using front panel monitor menu or network connection, verify that amplifier model, serial number, and date code match the product labeling and PWAs.

5.1.3. **Cables**: Visually and physically check that all cables and connectors are properly inserted and locked, not damaged. In addition, pay special attention to the following:

5.1.3.1. Check all ribbon cables for proper attachment of clamped-on connectors (insulation displacement connectors).

5.1.3.2. Check thin white sensor wires from main power supply inductor. Ensure they are not pinched or damaged in other power supply parts.

5.1.3.3. Check Lp/Ln coil wires to ensure they are securely fastened to the buss bars

5.1.4. **Hardware**: Visually and physically check that all fasteners are in place and securely installed.

5.2. <u>Amp fails to meet published specifications</u>

5.2.1. 2 Ohm Bench Power/THD

5.2.1.1. IT8000 only: Check for correct Lp/Ln coils, part number 136862-1

5.2.1.2. Check Underlap/Overlap adjustment

5.2.1.3. Check IMON (current monitor) adjustment

5.2.1.4. Verify sense resistors on output filter are well soldered

5.2.1.5. Check (12) screws (103436-10610) that attach output filter PWA to main amp PWA for proper installation and torque. See sheet 1 of assembly drawings.

5.2.1.6. Verify correct PWA number on power supply controller

5.2.1.7. Missing capacitors on power supply control PWA

5.2.1.8. Check cable J3 from EMI PWA for solder bridges, defective cable, loose connector

5.2.2. 4 Ohm Bench Power/THD

5.2.2.1. Verify correct PWA number on power supply controller

5.2.2.2. Missing capacitors on power supply control PWA

5.2.2.3. Check cable J3 from EMI PWA for solder bridges, defective cable, loose connector

5.2.3. 8 Ohm Bench Power/THD

5.2.3.1. Check for correct part number on input PWA

5.2.3.2. Check for correct model number on LCD “Monitor”menu

5.2.3.3. Verify correct PWA number on power supply controller

5.2.3.4. Missing capacitors on power supply control PWA

5.2.3.5. Check cable J3 from EMI PWA for solder bridges, defective cable, loose connector

5.2.4. Output Noise

5.2.4.1.Verify that all PWA mounting screws to chassis are present and properly torqued. See assembly drawings.

5.2.4.2. *If serial number is <001500*, replace USP3T PWA. Vendor-supplied defective capacitors caused noise problems on many amps in this serial number range. The problem is intermittent and may not be observed on the bench. The problem gets progressively worse over time.

5.2.4.2.1. Note: This problem is often described as clicking, popping, percolating sounds coming from the amplifier, even when no input signal is present, or when fully attenuated. If the customer presents this complaint, replace the USP3T.

5.2.4.2.2. *When replacing USP3T, the replacement board must have serial number and model number information programmed.* This can be done by Crown Factory Service, or International Distributors can obtain the necessary software utility from Crown Service.

5.2.5. Output DC offset

5.2.5.1. Defective input PWA

5.2.6. IMD (Intermodulation Distortion)

5.2.6.1. Check Underlap/Overlap adjustment

5.2.7. Frequency response

5.2.7.1. Check for correct Lp/Ln coils

5.3. <u>Indicator lights illuminated</u>

5.3.1. Thermal

5.3.1.1. Verify both fans are present, properly connected, and running

5.3.1.2. Verify both fans are the correct part number. IT8000 uses different fans than IT6000 or IT4000. See assembly drawings.

5.3.1.3. Verify power supply main resonant inductor is correct part number

5.3.1.4. Check power supply thermal sensor. If shorted to heatsink, controller PWA likely damaged also.

5.3.2. Fault

5.3.2.1. Amp Gate Drive PWAs: check C526, C527, C629 for physical damage

5.3.2.1.1. NOTE: When replacing amp gate drive PWA, set Overlap/Underlap pots to their middle position before powering on the amplifier.

5.3.2.2. Blown FET in main amplifier stage.

5.3.2.3. Check (12) screws (103436-10610) that attach output filter PWA to main amp PWA for proper installation and torque. See sheet 1 of assembly drawings.

5.3.2.4. If both fault LEDs illuminate *immediately* after power-on (<1 second), <u>and</u> LCD is dark, <u>and</u> power LED is lit, <u>and</u> serial number is in the range below, then check main power supply PWA version. If –6 or lower, move SCR on main power supply PWA. Contact Crown technical support for instructions.

Serial numbers affected: IT4k: 006702 thru 8419
IT6k: 006908 thru 8219
IT8k: 006684 thru 8569

5.3.3. Ready

5.3.3.1. Check C1047 for physical damage or soldering problems

5.3.3.2. If amp operates normally but ready lights randomly flash on and off, ensure that display ribbon cable is routed away from Lp/Ln coils at front corner of amplifier.

5.3.4. Signal

5.3.4.1. Check U400 for proper placement and soldering

5.3.5. Clip

5.3.5.1. *If serial number is in the range 005730 – 010000*: Check Lp/Ln wires for secure connection to buss bars on main amp PWA. Some "wiggle" is normal, but the connector should require some force to remove from the buss bar.

5.3.5.1.1. If connector is loose, carefully tighten with pliers and re-install. Check again for secure connection after installation.

5.3.5.2. *If main PWB version is –6 or lower*: Check W2B on output filter PWB near speakon connector. Ensure that W2B is not shorted to trace on PWB.

5.3.5.3. Check current sense transformer on output filter PWA

5.3.6. **<u>All</u> indicators are off, including LCD backlight**

5.3.6.1. Amp blown, see section 5.4.4

5.3.6.2. Main PS blown, see section 5.4.5

5.3.6.3. *If date code is <1040 (October 2004)*, check C1047, C1052, C1053, C1054 for leakage. With amplifier turned off measure DC resistance across the cap. A reading below 3.5kOhms indicates a defective part. Replace with 103191-1 .33uF SMT capacitor.

5.3.6.4. *If serial numbers are in range below, <u>and</u> AC mains are >= 220V*, then replace EMI PWA

5.3.6.4.1. Serial numbers affected: IT4k: 006702 thru 8419
IT6k: 006908 thru 8219
IT8k: 006684 thru 8569

Note: In early 2005, EMI PWAs were shipped directly to all Crown distributors affected by this problem for advance replacement in the S/N ranges above.

5.3.7. LCD Problems

5.3.7.1. LCD is illuminated, but contrast is wrong or appears dark purple

5.3.7.1.1. Replace D401 on display board with part manufactured by On Semiconductor.

5.3.7.2. LCD attenuation settings read "-100" on both channels, front panel knobs do not control attenutation

5.3.7.2.1. The front panel is not communicating with the USP3T. Check R485 and U402 on display PWA for proper soldering.

5.3.7.2.2. *When replacing USP3T, the replacement board must have serial number and model number information programmed.* This can be done

by Crown Factory Service, or International Distributors can obtain the necessary software utility from Crown Service.

5.3.7.3. LCD is not illuminated at all

5.3.7.3.1. Verify display ribbon cable fully seated

5.3.7.3.2. Check for solder bridges or cold solder on J400 and Q401.

5.3.7.3.3. If both fault LEDs are on, see section 5.3.2

5.3.7.4. LCD partially illuminated, portions of display missing

5.3.7.4.1. The LCD connector may contact vias on the display board. Remove LCD and re-install. If problem persists, replace with new display PWA.

5.4. <u>Other Failures</u>

5.4.1. Fans do not run

5.4.1.1. Check display PWA R459, R488, R489 for proper soldering

5.4.1.2. Verify model number of amplifier using front panel LCD "monitor" menu.

5.4.1.3. Verify fans properly installed and connected

5.4.1.4. Check placement of transistors in fan drive circuit, ensure they are not shorting to the heatsink clip.

5.4.2. Network communications do not function

5.4.2.1. Check RJ45 network connector for proper soldering. Re-touch if necessary.

5.4.2.2. Check RJ45 network connector locking mechanism. Insert a network cable and pull gently. If the cable comes out, replace the connector.

5.4.3. "Power Draw" "Light Zap"

5.4.3.1. Amplifier draws large currents at power-on, blows breakers.

5.4.3.1.1. Power Supply heatsink insulator: Check for presence and proper location. See section 5.4.5.1.

5.4.3.1.2. Main amp PWA: verify proper polarity on all large electrolytic caps

5.4.3.1.3. Main amp heatsinks: verify presence and proper location of insulator/shield between heatsinks and chassis. See sheet 4 of assembly drawings, section A8.

5.4.4. Amp section blown

5.4.4.1. Check thermal sensors on amp heat sinks. If these are pinched under the FET clip, this failure will occur.

5.4.4.2. *If serial number is <006950*: look for blown devices in main amp output stage. Replace defective devices, <u>install new clip 132569-3. Do NOT re-use the old clip.</u>

NOTE: If one device in a bank must be replaced be sure to replace all devices of that type in the same bank. For example, if a diode in channel 1 's high side must be replaced both diodes must be replaced. Overlap and under-lap also must be adjusted whenever an amplifier power device is replaced. See section 4.1.4.

5.4.5. Power supply blown

5.4.5.1. Verify correct installation of insulator between power supply heatsinks and EMI board. See sheet 4 of assembly drawings, section D5 for proper installation. When incorrectly installed this part can damage the power supply gate drive connectors, causing failure.

5.5. Cosmetic Problems

5.5.1. Front panel encoders rub or grind

5.5.1.1. Try pushing the knobs firmly onto the encoders

5.5.1.2. If this does not work, remove the front panel and ensure the encoders are soldered flat to the display PWA. They must be within +/- 3 degrees of perfect or the knobs will rub.

5.5.2. Damaged or scratched overlay, LCD lens, menu buttons

5.5.2.1. Replace with new parts. See assembly drawings for part numbers.

5.5.3. Damaged PEM insert on front panel

5.5.3.1. During disassembly and servicing of the amplifier, the PEM nuts on the upper edge of front panel may come loose. Should this occur, the PEM can be pressed back in, or a new panel can be ordered.

NOTE: If the PEM falls out, make sure you find it and don’t leave the part inside the amplifier!

Revision History
Original Release: 10-21-2005 M. Kellom

IT4000 Panel 1 137067-5 REVISION HISTORY				
E.C.N	**REV**	**DESCRIPTION**	**DATE**	**PE**
	A	INITIAL RELEASE DERIVED FROM 136547-4 REV.A. WITH THE FOLLOWING CHANGES: DELETED FB600 AND FB600X. ADDED R741 AND R741X A11368-10011. C676 AND C676X WERE OPEN. E403 AND E407 WERE 131105-1. R617 AND R617X WERE A11368-52311. C611, C612, C611X, AND C612X WERE 136906-1	04/20/04	TJS
05N0057	B	U401 WAS 136510-1	01/27/05	TJS
05N0175	C	C629, C629X, C634. C634X, C656, & C656X WERE 103191-1	03/22/05	AA

UNLESS OTHERWISE SPECIFIED, THIS PRINTED WIRING ASSEMBLY SHALL MEET THE SPECIFICATION DESCRIBED IN IPC-A-610C CLASS 2 STANDARDS.

NOTES:

1. PRINTED WIRING BOARD PART NUMBER 136546-5.
2. SEE 137067-5_C.TIF FOR SCHEMATIC AND BOARD MAP
3. ALL LEADS SHALL BE TRIMMED TO 0.093" OR LESS.
4. POSITION COMPONENTS AS SHOWN ON COMPONENT MAP.
5. THE PRINTED WIRING ASSEMBLY PART NUMBER FOR THIS ASSEMBLY SHALL BE MARKED ON THE PRINTED WIRING BOARD AND SHALL BE PERMANENT.
6. MAP LOCATIONS DENOTED BY AN ASTERISK (*), INDICATE COMPONENTS MOUNTED ON THE BOTTOM SIDE OF THE PRINTED WIRING BOARD.
7. APPLY TORQUE SEAL (101036-1) TO R605, R605X, R721 AND R721X AFTER FINAL ADJUSTMENT.
8. HW400 AND HW401 ARE TO BE PERPENDICULAR TO THE PWB.
9. S401, S402, S403, S404, S405, AND S406 ARE TO BE FLUSH AND PERPENDICULAR TO THE PWB.
10. **DO NOT USE J401 RIBBON CABLE AS A WAY TO CARRY THE ASSEMBLED BOARD.** BOARDS ARE TO HANDLED BY THE **EDGES** ONLY.

PWA BOARD IDENTIFIER AND DESCRIPTION	
A	DISPLAY
B	FRONT END CHANNEL 1
C	FRONT END CHANNEL 2

DWN	TLM	04/20/04	PE	TJS	04/20/04	CM	KZ		DIST.

REF. DES.	CPN	DESCRIPTION	MAP LOC.
C400	A11427-104K2	.1UF 50V CHIP CAP 10% 0805 X7R	G 1
C401	132042-1	CAP, 100UF 35V ALUM ELECT SMT	D 2
C402	A11427-103K2	.01 UF 50V 10% X7R MLC 0805	D 2*
C403	135215-1	CAP, 100UF/10V TANTALUM SMT	C 1
C404	A11427-104K2	.1UF 50V CHIP CAP 10% 0805 X7R	B 2
C405	132042-1	CAP, 100UF 35V ALUM ELECT SMT	I 2
C406	135505-1	CAP, 0.1UF 25V 10% X7R 0603	G 2
C407	135505-1	CAP, 0.1UF 25V 10% X7R 0603	M 1
C408	135505-1	CAP, 0.1UF 25V 10% X7R 0603	C 1
C409	A11427-103K1	0.01UF 50V 10% X7R MLC 0603	D 1
C410	A11427-103K1	0.01UF 50V 10% X7R MLC 0603	D 1
C411	135505-1	CAP, 0.1UF 25V 10% X7R 0603	H 1
C412	A11427-103K1	0.01UF 50V 10% X7R MLC 0603	H 1
C413	A11427-103K1	0.01UF 50V 10% X7R MLC 0603	H 1
C414	135505-1	CAP, 0.1UF 25V 10% X7R 0603	B 1
C415	A11427-103K1	0.01UF 50V 10% X7R MLC 0603	A 1
C417	A11369-100J2	CAP, 10PF 5% 50V SMT 0805	A 1
C418	A11369-100J2	CAP, 10PF 5% 50V SMT 0805	A 1
C419	135505-1	CAP, 0.1UF 25V 10% X7R 0603	D 1
C420	A11427-104K2	.1UF 50V CHIP CAP 10% 0805 X7R	A 1*
C421	A11427-104K2	.1UF 50V CHIP CAP 10% 0805 X7R	B 1*
C422	A11427-104K2	.1UF 50V CHIP CAP 10% 0805 X7R	A 1*
C423	A11427-104K2	.1UF 50V CHIP CAP 10% 0805 X7R	B 1*
C424	A11427-104K2	.1UF 50V CHIP CAP 10% 0805 X7R	B 1*
C425	135215-1	CAP, 100UF/10V TANTALUM SMT	B 1
C428	A11427-104K2	.1UF 50V CHIP CAP 10% 0805 X7R	A 2
C429	A11427-104K2	.1UF 50V CHIP CAP 10% 0805 X7R	A 2*
C430	A11427-104K2	.1UF 50V CHIP CAP 10% 0805 X7R	A 2*
C431	135505-1	CAP, 0.1UF 25V 10% X7R 0603	E 1
C432	A11427-103K1	0.01UF 50V 10% X7R MLC 0603	D 1
C433	135505-1	CAP, 0.1UF 25V 10% X7R 0603	D 1
C434	135505-1	CAP, 0.1UF 25V 10% X7R 0603	I 1
C435	135215-1	CAP, 100UF/10V TANTALUM SMT	I 1
C436	135215-1	CAP, 100UF/10V TANTALUM SMT	I 1
C437	135505-1	CAP, 0.1UF 25V 10% X7R 0603	H 1
C438	135505-1	CAP, 0.1UF 25V 10% X7R 0603	E 1
C440	A11427-104K2	.1UF 50V CHIP CAP 10% 0805 X7R	A 2*
C600	A11369-101J2	100 PF 50V 5% NPO MLC 0805 T/R	C 4
C601	102438-221F2	220PF 200V 1% NPO 0805	D 4*
C602	102438-221F2	220PF 200V 1% NPO 0805	D 3*
C603	102438-221F2	220PF 200V 1% NPO 0805	D 3*
C604	102438-221F2	220PF 200V 1% NPO 0805	D 3*

C605	102438-221F2	220PF 200V 1% NPO 0805	D 3*
C606	102438-221F2	220PF 200V 1% NPO 0805	D 3
C607	102438-221F2	220PF 200V 1% NPO 0805	D 3*
C608	102438-221F2	220PF 200V 1% NPO 0805	C 3
C609	103418-103J2	.01UF 5% 100V X7R 0805	C 3*
C610	A11369-471J2	CAP, 470PF 5% 50V SMT 0805	C 3*
C611	137422-1	CAP, CAP, 0.01UF 25V 5% NPO 1206	C 3*
C612	137422-1	CAP, CAP, 0.01UF 25V 5% NPO 1206	C 3*
C613	103418-103J2	.01UF 5% 100V X7R 0805	C 3*
C614	103418-103J2	.01UF 5% 100V X7R 0805	C 3
C615	133875-1	CAP, 1UF 10% 10V X7R 0805 SMT	C 3
C616	A11369-100J2	CAP, 10PF 5% 50V SMT 0805	C 3*
C617		OPEN	A 3*
C618	A11369-270K2	27PF 50V 10% NPO 0805 T/R	A 3*
C619	A11427-104K2	.1UF 50V CHIP CAP 10% 0805 X7R	A 3
C620		OPEN	A 3*
C621	A11369-270K2	27PF 50V 10% NPO 0805 T/R	A 3*
C622	A11427-104K2	.1UF 50V CHIP CAP 10% 0805 X7R	A 3
C623	A11427-104K2	.1UF 50V CHIP CAP 10% 0805 X7R	A 3
C624	A11427-104K2	.1UF 50V CHIP CAP 10% 0805 X7R	A 3
C625	A11427-104K2	.1UF 50V CHIP CAP 10% 0805 X7R	A 3*
C626	A11427-104K2	.1UF 50V CHIP CAP 10% 0805 X7R	A 3*
C627	A11427-104K2	.1UF 50V CHIP CAP 10% 0805 X7R	A 4
C628	A11427-104K2	.1UF 50V CHIP CAP 10% 0805 X7R	A 4*
C629	A11427-334J6	0.33UF 50V 5% CHIP X7R 1210	A 4
C630	A11369-102J2	.001UF 50V 5% NPO MLC 0805 T/R	A 3
C631	A11427-104K2	.1UF 50V CHIP CAP 10% 0805 X7R	A 2*
C632	A11369-100J2	CAP, 10PF 5% 50V SMT 0805	C 3*
C633	A11369-100J2	CAP, 10PF 5% 50V SMT 0805	C 3*
C634	A11427-334J6	0.33UF 50V 5% CHIP X7R 1210	C 3
C635	A11427-104K2	.1UF 50V CHIP CAP 10% 0805 X7R	C 3*
C636	A11369-220J2	22 PF 5% 50V NPO CER CHIP	B 3*
C637	A11427-104K2	.1UF 50V CHIP CAP 10% 0805 X7R	B 3*
C638	103418-103J2	.01UF 5% 100V X7R 0805	B 3*
C639	133875-1	CAP, 1UF 10% 10V X7R 0805 SMT	B 3*
C640	A11427-104K2	.1UF 50V CHIP CAP 10% 0805 X7R	B 3*
C641	A11369-102F2	1000PF 50V 1% CHIP CAP	B 3*
C642	A11427-104K2	.1UF 50V CHIP CAP 10% 0805 X7R	B 2
C643	126539-1	10UF 16V 5.5MM HIGH SMD	B 2
C644	A11369-470K2	47PF 50V 10% NPO 0805 T/R	B 3
C645	103418-103J2	.01UF 5% 100V X7R 0805	B 2
C646	A11369-100J2	CAP, 10PF 5% 50V SMT 0805	B 2*
C647	A11369-100J2	CAP, 10PF 5% 50V SMT 0805	B 3
C648	A11369-101J2	100 PF 50V 5% NPO MLC 0805 T/R	B 3*
C649	126539-1	10UF 16V 5.5MM HIGH SMD	B 3
C650	A11369-102J2	.001UF 50V 5% NPO MLC 0805 T/R	B 3*
C651	A11369-332J5	CAP, 3300PF 5% 50V SMT 1206	B 3*
C652	A11369-102J2	.001UF 50V 5% NPO MLC 0805 T/R	B 3*
C653	A11427-223K2	0.022UF 50V 10% CHIP X7R 0805	B 3*
C654	A11427-473K2	.047UF 50V 10% X7R MLC 0805 TR	B 3*
C655	A11427-104K2	.1UF 50V CHIP CAP 10% 0805 X7R	D 3

C656	A11427-334J6	0.33UF 50V 5% CHIP X7R 1210	D 3
C657	126551-1	100UF 25V ELCAP SMD	A 2
C658	A11427-334J6	.33UF 50V 5% CHIP X7R 1210	D 3
C659	A11369-100J2	CAP, 10PF 5% 50V SMT 0805	D 4
C660	103418-103J2	.01UF 5% 100V X7R 0805	D 3*
C661	A11369-332J5	CAP, 3300PF 5% 50V SMT 1206	D 3*
C662	A11369-1R5C2	1.5PF 50V +/-.25PF NPO MLC 0805	D 4
C663	A11427-104K2	.1UF 50V CHIP CAP 10% 0805 X7R	B 3*
C664	A11427-104K2	.1UF 50V CHIP CAP 10% 0805 X7R	C 3
C665	A11427-104K2	.1UF 50V CHIP CAP 10% 0805 X7R	C 3*
C666	A11427-104K2	.1UF 50V CHIP CAP 10% 0805 X7R	C 2*
C667	A11427-104K2	.1UF 50V CHIP CAP 10% 0805 X7R	C 3
C668	A11427-104K2	.1UF 50V CHIP CAP 10% 0805 X7R	B 3
C669	A11427-104K2	.1UF 50V CHIP CAP 10% 0805 X7R	B 3*
C670	A11427-104K2	.1UF 50V CHIP CAP 10% 0805 X7R	C 2*
C671	A11427-104K2	.1UF 50V CHIP CAP 10% 0805 X7R	C 3*
C672	A11427-104K2	.1UF 50V CHIP CAP 10% 0805 X7R	A 2
C673	A11427-104K2	.1UF 50V CHIP CAP 10% 0805 X7R	A 3
C674	A11427-104K2	.1UF 50V CHIP CAP 10% 0805 X7R	D 3*
C675	A11427-104K2	.1UF 50V CHIP CAP 10% 0805 X7R	D 3*
C676	A11369-102J2	.001UF 50V 5% NPO MLC 0805 T/R	C 3*
C600X	A11369-101J2	100 PF 50V 5% NPO MLC 0805 T/R	H 4
C601X	102438-221F2	220PF 200V 1% NPO 0805	H 4*
C602X	102438-221F2	220PF 200V 1% NPO 0805	H 3*
C603X	102438-221F2	220PF 200V 1% NPO 0805	H 3*
C604X	102438-221F2	220PF 200V 1% NPO 0805	H 3*
C605X	102438-221F2	220PF 200V 1% NPO 0805	H 3*
C606X	102438-221F2	220PF 200V 1% NPO 0805	H 3
C607X	102438-221F2	220PF 200V 1% NPO 0805	H 3*
C608X	102438-221F2	220PF 200V 1% NPO 0805	H 3
C609X	103418-103J2	.01UF 5% 100V X7R 0805	H 3*
C610X	A11369-471J2	CAP, 470PF 5% 50V SMT 0805	H 3*
C611X	137422-1	CAP, CAP, 0.01UF 25V 5% NPO 1206	H 3*
C612X	137422-1	CAP, CAP, 0.01UF 25V 5% NPO 1206	H 3*
C613X	103418-103J2	.01UF 5% 100V X7R 0805	H 3*
C614X	103418-103J2	.01UF 5% 100V X7R 0805	H 3
C615X	133875-1	CAP, 1UF 10% 10V X7R 0805 SMT	G 3
C616X	A11369-100J2	CAP, 10PF 5% 50V SMT 0805	H 3*
C617X		OPEN	F 3*
C618X	A11369-270K2	27PF 50V 10% NPO 0805 T/R	E 3*
C619X	A11427-104K2	.1UF 50V CHIP CAP 10% 0805 X7R	F 3
C620X		OPEN	F 3*
C621X	A11369-270K2	27PF 50V 10% NPO 0805 T/R	F 3*
C622X	A11427-104K2	.1UF 50V CHIP CAP 10% 0805 X7R	F 3
C623X	A11427-104K2	.1UF 50V CHIP CAP 10% 0805 X7R	F 3
C624X	A11427-104K2	.1UF 50V CHIP CAP 10% 0805 X7R	E 3
C625X	A11427-104K2	.1UF 50V CHIP CAP 10% 0805 X7R	E 3*
C626X	A11427-104K2	.1UF 50V CHIP CAP 10% 0805 X7R	F 3*
C627X	A11427-104K2	.1UF 50V CHIP CAP 10% 0805 X7R	E 4
C628X	A11427-104K2	.1UF 50V CHIP CAP 10% 0805 X7R	F 4*
C629X	A11427-334J6	0.33UF 50V 5% CHIP X7R 1210	F 4

C630X	A11369-102J2	.001UF 50V 5% NPO MLC 0805 T/R	F 3
C631X	A11427-104K2	.1UF 50V CHIP CAP 10% 0805 X7R	F 2*
C632X	A11369-100J2	CAP, 10PF 5% 50V SMT 0805	H 3*
C633X	A11369-100J2	CAP, 10PF 5% 50V SMT 0805	H 3*
C634X	A11427-334J6	0.33UF 50V 5% CHIP X7R 1210	G 3
C635X	A11427-104K2	.1UF 50V CHIP CAP 10% 0805 X7R	G 3*
C636X	A11369-220J2	22 PF 5% 50V NPO CER CHIP	G 3*
C637X	A11427-104K2	.1UF 50V CHIP CAP 10% 0805 X7R	G 3*
C638X	103418-103J2	.01UF 5% 100V X7R 0805	G 3*
C639X	133875-1	CAP, 1UF 10% 10V X7R 0805 SMT	G 3*
C640X	A11427-104K2	.1UF 50V CHIP CAP 10% 0805 X7R	G 3*
C641X	A11369-102F2	1000PF 50V 1% CHIP CAP	G 3*
C642X	A11427-104K2	.1UF 50V CHIP CAP 10% 0805 X7R	G 2
C643X	126539-1	10UF 16V 5.5MM HIGH SMD	G 2
C644X	A11369-470K2	47PF 50V 10% NPO 0805 T/R	F 3
C645X	103418-103J2	.01UF 5% 100V X7R 0805	F 2
C646X	A11369-100J2	CAP, 10PF 5% 50V SMT 0805	F 2*
C647X	A11369-100J2	CAP, 10PF 5% 50V SMT 0805	F 3
C648X	A11369-101J2	100 PF 50V 5% NPO MLC 0805 T/R	F 3*
C649X	126539-1	10UF 16V 5.5MM HIGH SMD	F 3
C650X	A11369-102J2	.001UF 50V 5% NPO MLC 0805 T/R	G 3*
C651X	A11369-332J5	CAP, 3300PF 5% 50V SMT 1206	F 3*
C652X	A11369-102J2	.001UF 50V 5% NPO MLC 0805 T/R	F 3*
C653X	A11427-223K2	0.022UF 50V 10% CHIP X7R 0805	G 3*
C654X	A11427-473K2	.047UF 50V 10% X7R MLC 0805 TR	F 3*
C655X	A11427-104K2	.1UF 50V CHIP CAP 10% 0805 X7R	I 3
C656X	A11427-334J6	0.33UF 50V 5% CHIP X7R 1210	I 3
C657X	126551-1	100UF 25V ELCAP SMD	F 2
C658X	A11427-334J6	.33UF 50V 5% CHIP X7R 1210	I 3
C659X	A11369-100J2	CAP, 10PF 5% 50V SMT 0805	I 4
C660X	103418-103J2	.01UF 5% 100V X7R 0805	I 3*
C661X	A11369-332J5	CAP, 3300PF 5% 50V SMT 1206	I 3*
C662X	A11369-1R5C2	1.5PF 50V +/-.25PF NPO MLC 0805	H 4
C663X	A11427-104K2	.1UF 50V CHIP CAP 10% 0805 X7R	G 3*
C664X	A11427-104K2	.1UF 50V CHIP CAP 10% 0805 X7R	H 3
C665X	A11427-104K2	.1UF 50V CHIP CAP 10% 0805 X7R	H 3*
C666X	A11427-104K2	.1UF 50V CHIP CAP 10% 0805 X7R	G 2*
C667X	A11427-104K2	.1UF 50V CHIP CAP 10% 0805 X7R	G 3
C668X	A11427-104K2	.1UF 50V CHIP CAP 10% 0805 X7R	G 3
C669X	A11427-104K2	.1UF 50V CHIP CAP 10% 0805 X7R	G 3*
C670X	A11427-104K2	.1UF 50V CHIP CAP 10% 0805 X7R	H 2*
C671X	A11427-104K2	.1UF 50V CHIP CAP 10% 0805 X7R	H 3*
C672X	A11427-104K2	.1UF 50V CHIP CAP 10% 0805 X7R	E 2
C673X	A11427-104K2	.1UF 50V CHIP CAP 10% 0805 X7R	E 3
C674X	A11427-104K2	.1UF 50V CHIP CAP 10% 0805 X7R	I 3*
C675X	A11427-104K2	.1UF 50V CHIP CAP 10% 0805 X7R	I 3*
C676X	A11369-102J2	.001UF 50V 5% NPO MLC 0805 T/R	H 3*
D400	125711-1	DIODE, SCHOTTKY 40V 1A DO214A	D 2
D401	C 9773-0	DIODE, ZENER 5.1V 1N5231 SMT	B 2
D600	C 9283-0	DIODE, MMBD4148/914 SOT-23 SMT	C 3
D601	C 9283-0	DIODE, MMBD4148/914 SOT-23 SMT	C 3

D602	C 9283-0	DIODE, MMBD4148/914 SOT-23 SMT	C 3*
D603	C 9283-0	DIODE, MMBD4148/914 SOT-23 SMT	C 3*
D604	C 9283-0	DIODE, MMBD4148/914 SOT-23 SMT	B 3*
D605	C 9283-0	DIODE, MMBD4148/914 SOT-23 SMT	B 2
D606	C 9283-0	DIODE, MMBD4148/914 SOT-23 SMT	B 2*
D607	C 9283-0	DIODE, MMBD4148/914 SOT-23 SMT	B 2
D608	C 9283-0	DIODE, MMBD4148/914 SOT-23 SMT	D 4
D609	C 9283-0	DIODE, MMBD4148/914 SOT-23 SMT	D 4
D600X	C 9283-0	DIODE, MMBD4148/914 SOT-23 SMT	G 3
D601X	C 9283-0	DIODE, MMBD4148/914 SOT-23 SMT	G 3
D602X	C 9283-0	DIODE, MMBD4148/914 SOT-23 SMT	H 3*
D603X	C 9283-0	DIODE, MMBD4148/914 SOT-23 SMT	H 3*
D604X	C 9283-0	DIODE, MMBD4148/914 SOT-23 SMT	G 3*
D605X	C 9283-0	DIODE, MMBD4148/914 SOT-23 SMT	G 2
D606X	C 9283-0	DIODE, MMBD4148/914 SOT-23 SMT	G 2*
D607X	C 9283-0	DIODE, MMBD4148/914 SOT-23 SMT	G 2
D608X	C 9283-0	DIODE, MMBD4148/914 SOT-23 SMT	I 4
D609X	C 9283-0	DIODE, MMBD4148/914 SOT-23 SMT	I 4
E400	126473-1	LED, GRN SMT 1206	C 1
E401	126473-1	LED, GRN SMT 1206	C 1
E402	126473-1	LED, GRN SMT 1206	C 1
E403	137458-1	LED, RED 631NM SMT VERT 1206	C 1
E404	126473-1	LED, GRN SMT 1206	I 1
E405	126473-1	LED, GRN SMT 1206	I 1
E406	126473-1	LED, GRN SMT 1206	I 1
E407	137458-1	LED, RED 631NM SMT VERT 1206	I 1
E408	126473-1	LED, GRN SMT 1206	C 1
E409	131105-1	LED, RED 638NM 1206 SMT	C 2
E410	126473-1	LED, GRN SMT 1206	I 1
E411	131105-1	LED, RED 638NM 1206 SMT	I 2
E412	131106-1	LED, YELLOW 585NM 1206 SMT	M 1
E413	131238-1	LED, BLUE 470NM 1206 SMT	G 1
E414	131238-1	LED, BLUE 470NM 1206 SMT	F 1
E415	131238-1	LED, BLUE 470NM 1206 SMT	E 1
E416	131106-1	LED, YELLOW 585NM 1206 SMT	M 1
E417	131105-1	LED, RED 638NM 1206 SMT	C 2
E418	131105-1	LED, RED 638NM 1206 SMT	I 2
E419	126473-1	LED, GRN SMT 1206	M 2
E420	126473-1	LED, GRN SMT 1206	M 1
E421	131238-1	LED, BLUE 470NM 1206 SMT	M 2
E422	126473-1	LED, GRN SMT 1206	B 1
E423		OPEN	G 2
E600	126473-1	LED, GRN SMT 1206	A 3
E600X	126473-1	LED, GRN SMT 1206	E 3
FB400	125846-1	FERRITE BEAD, 600 OHM .5A 0805	C 1*
HW400	136960-1	STANDOFF, 4-40X.375 RD SWAGE	D 2
HW401	136960-1	STANDOFF, 4-40X.375 RD SWAGE	G 2
HW402	136546-5	PWB, I-TECH PANEL 1	A 1
HW403	101016-1	LBL, BARCODE	K 1
HW404	101016-1	LBL, BARCODE	I 3
HW405	101016-1	LBL, BARCODE	D 3

J400	136673-1	CONN, 20 PIN SMT SOCKET	G 2
J401	136674-1	CONN, 24 PIN RIBBON	A 1
J402	137164-1	HEADER, 14PIN .1X.1 PIN8 VOID	A 1
J600	133931-1	HDR, 30 PIN DUAL ROW R/A	C 4
J600X	133931-1	HDR, 30 PIN DUAL ROW R/A	G 4
L400	136676-1	INDUCTOR, 115UH PULSE LCI-37	C 2
L402	127060-1	INDUCTOR, 220UH 290MA SMT 7032	I 2
L403	127060-1	INDUCTOR, 220UH 290MA SMT 7032	D 2
Q400	C 7448-1	MMBT3904 CHIP NPN	B 2
Q401	C 7448-1	MMBT3904 CHIP NPN	F 2
Q402	C 7448-1	MMBT3904 CHIP NPN	M 1
Q600	C 7448-1	MMBT3904 CHIP NPN	C 3
Q601	125798-1	TRANSISTOR,MMBT3906LTI PNP SMT	C 3
Q602	C 9931-4	MMBT5087LT1 PNP XSISTOR SOT-23	B 3*
Q603	C 9931-4	MMBT5087LT1 PNP XSISTOR SOT-23	B 3
Q604	125798-1	TRANSISTOR,MMBT3906LTI PNP SMT	B 2*
Q605	125798-1	TRANSISTOR,MMBT3906LTI PNP SMT	B 3*
Q606	C 7448-1	MMBT3904 CHIP NPN	B 3
Q607	C 7448-1	MMBT3904 CHIP NPN	B 3
Q608	C 7448-1	MMBT3904 CHIP NPN	A 2
Q609	125798-1	TRANSISTOR,MMBT3906LTI PNP SMT	A 3*
Q600X	C 7448-1	MMBT3904 CHIP NPN	H 3
Q601X	125798-1	TRANSISTOR,MMBT3906LTI PNP SMT	H 3
Q602X	C 9931-4	MMBT5087LT1 PNP XSISTOR SOT-23	F 3*
Q603X	C 9931-4	MMBT5087LT1 PNP XSISTOR SOT-23	G 3
Q604X	125798-1	TRANSISTOR,MMBT3906LTI PNP SMT	F 2*
Q605X	125798-1	TRANSISTOR,MMBT3906LTI PNP SMT	F 3*
Q606X	C 7448-1	MMBT3904 CHIP NPN	F 3
Q607X	C 7448-1	MMBT3904 CHIP NPN	F 3
Q608X	C 7448-1	MMBT3904 CHIP NPN	F 2
Q609X	125798-1	TRANSISTOR,MMBT3906LTI PNP SMT	F 3*
R400	A11368-10021	10K 1/10W 1% SMD 0805 T/R	A 1*
R401		OPEN	A 1*
R402	A11368-10021	10K 1/10W 1% SMD 0805 T/R	A 1*
R403		OPEN	A 1*
R405	A11368-25501	255 OHM 1% 0.1W 0805 T/R	C 2
R406	A11368-25501	255 OHM 1% 0.1W 0805 T/R	I 2
R407	A11368-25501	255 OHM 1% 0.1W 0805 T/R	M 2
R408	A11368-25501	255 OHM 1% 0.1W 0805 T/R	M 1
R409	A11368-10020	RES, 10.0 KOHM 1/16W 1% 0603	G 1
R410	A11368-90901	909 OHM .1W 1% 0805 T/R	G 1
R411		OPEN	H 1
R413	A11371-0R02	0. OHM .125W 5% CHIP RES T/R	D 2*
R415	A11368-10010	RES, 1.0 KOHM 1/16W 1% 0603	B 2
R416	A11368-10020	RES, 10.0 KOHM 1/16W 1% 0603	B 2
R417	A11368-10020	RES, 10.0 KOHM 1/16W 1% 0603	B 2
R418	A11368-10020	RES, 10.0 KOHM 1/16W 1% 0603	B 2
R419	A11368-10020	RES, 10.0 KOHM 1/16W 1% 0603	A 2
R420	A11368-10020	RES, 10.0 KOHM 1/16W 1% 0603	B 2
R421	A11368-10010	RES, 1.0 KOHM 1/16W 1% 0603	B 2
R422	A11368-10010	RES, 1.0 KOHM 1/16W 1% 0603	B 2

R423	A11368-10010	RES, 1.0 KOHM 1/16W 1% 0603	A 2
R424	A11368-10020	RES, 10.0 KOHM 1/16W 1% 0603	B 2
R425	A11368-10021	10K 1/10W 1% SMD 0805 T/R	B 2
R426	A11368-10021	10K 1/10W 1% SMD 0805 T/R	B 2*
R427	A11371-1032	10. KOHM .125W 5% CHIP RES T/R	B 2
R428	A11371-1032	10. KOHM .125W 5% CHIP RES T/R	B 2
R429	A11371-1032	10. KOHM .125W 5% CHIP RES T/R	B 2*
R430	A11371-1032	10. KOHM .125W 5% CHIP RES T/R	B 2*
R431	A11368-10020	RES, 10.0 KOHM 1/16W 1% 0603	G 1
R432	A11368-10020	RES, 10.0 KOHM 1/16W 1% 0603	G 1
R433	A11368-10020	RES, 10.0 KOHM 1/16W 1% 0603	G 2
R434	A11368-10020	RES, 10.0 KOHM 1/16W 1% 0603	G 2
R435	A11368-10020	RES, 10.0 KOHM 1/16W 1% 0603	G 1
R436	A11368-10020	RES, 10.0 KOHM 1/16W 1% 0603	D 1
R437	A11368-33R20	RES, 33.2 OHM 1/16W 1% 0603	D 1
R438	A11368-25501	255 OHM 1% 0.1W 0805 T/R	F 2
R439	A11368-25501	255 OHM 1% 0.1W 0805 T/R	F 2
R440	A11368-25501	255 OHM 1% 0.1W 0805 T/R	F 2
R441	A11368-25501	255 OHM 1% 0.1W 0805 T/R	G 2
R442	A11368-10021	10K 1/10W 1% SMD 0805 T/R	C 1*
R443	A11368-25501	255 OHM 1% 0.1W 0805 T/R	A 1*
R444	A11368-10020	RES, 10.0 KOHM 1/16W 1% 0603	E 1
R445	A11368-33R20	RES, 33.2 OHM 1/16W 1% 0603	B 2
R446	A11368-10020	RES, 10.0 KOHM 1/16W 1% 0603	F 1
R447	A11368-33R20	RES, 33.2 OHM 1/16W 1% 0603	B 2
R448	A11368-10020	RES, 10.0 KOHM 1/16W 1% 0603	G 1
R449	A11368-33R20	RES, 33.2 OHM 1/16W 1% 0603	B 2
R450	A11368-33R20	RES, 33.2 OHM 1/16W 1% 0603	B 1
R451	A11368-33R20	RES, 33.2 OHM 1/16W 1% 0603	B 1
R452	A11368-33R20	RES, 33.2 OHM 1/16W 1% 0603	B 1
R453	A11368-33R20	RES, 33.2 OHM 1/16W 1% 0603	B 1
R454	A11368-33R20	RES, 33.2 OHM 1/16W 1% 0603	B 1
R455	A11368-33R20	RES, 33.2 OHM 1/16W 1% 0603	B 1
R456	A11368-33R20	RES, 33.2 OHM 1/16W 1% 0603	B 1
R457	A11368-33R20	RES, 33.2 OHM 1/16W 1% 0603	B 1
R458	A11368-33R21	33.2 OHM 1% 0805 RES T/R	C 1*
R459	A11368-33R21	33.2 OHM 1% 0805 RES T/R	B 2*
R460	A11368-33R20	RES, 33.2 OHM 1/16W 1% 0603	B 1
R461	A11368-33R21	33.2 OHM 1% 0805 RES T/R	B 1*
R462	A11368-33R20	RES, 33.2 OHM 1/16W 1% 0603	B 1
R463	A11368-33R20	RES, 33.2 OHM 1/16W 1% 0603	B 1
R464	A11368-33R20	RES, 33.2 OHM 1/16W 1% 0603	C 1
R465	A11368-33R20	RES, 33.2 OHM 1/16W 1% 0603	B 1
R466	A11368-33R20	RES, 33.2 OHM 1/16W 1% 0603	B 1
R467	A11368-33R20	RES, 33.2 OHM 1/16W 1% 0603	B 2
R468	A11368-10020	RES, 10.0 KOHM 1/16W 1% 0603	C 1
R469	A11368-10020	RES, 10.0 KOHM 1/16W 1% 0603	D 1
R470	A11368-10020	RES, 10.0 KOHM 1/16W 1% 0603	C 1
R471	A11368-10020	RES, 10.0 KOHM 1/16W 1% 0603	C 1
R472	A11368-10020	RES, 10.0 KOHM 1/16W 1% 0603	D 1
R473	A11368-33R20	RES, 33.2 OHM 1/16W 1% 0603	B 2

R474	A11368-10020	RES, 10.0 KOHM 1/16W 1% 0603	H 1
R475	A11368-10020	RES, 10.0 KOHM 1/16W 1% 0603	H 1
R476	A11368-10020	RES, 10.0 KOHM 1/16W 1% 0603	H 1
R477	A11368-10020	RES, 10.0 KOHM 1/16W 1% 0603	H 1
R478	A11368-10020	RES, 10.0 KOHM 1/16W 1% 0603	H 1
R479	A11368-10020	RES, 10.0 KOHM 1/16W 1% 0603	B 2
R480	A11368-10020	RES, 10.0 KOHM 1/16W 1% 0603	B 2
R481	A11368-10020	RES, 10.0 KOHM 1/16W 1% 0603	B 2
R482	A11368-10020	RES, 10.0 KOHM 1/16W 1% 0603	A 2
R483	A11368-33R21	33.2 OHM 1% 0805 RES T/R	B 1*
R484	A11368-10021	10K 1/10W 1% SMD 0805 T/R	A 1*
R485	A11368-10010	RES, 1.0 KOHM 1/16W 1% 0603	C 2
R486	A11368-33R20	RES, 33.2 OHM 1/16W 1% 0603	B 2
R487	A11368-33R20	RES, 33.2 OHM 1/16W 1% 0603	F 1
R488	A11368-10010	RES, 1.0 KOHM 1/16W 1% 0603	B 2
R489	A11368-33R20	RES, 33.2 OHM 1/16W 1% 0603	F 1
R490	A11368-10020	RES, 10.0 KOHM 1/16W 1% 0603	D 1
R491	A11368-33R21	33.2 OHM 1% 0805 RES T/R	A 1*
R492	A11368-10021	10K 1/10W 1% SMD 0805 T/R	A 2*
R493	A11368-10021	10K 1/10W 1% SMD 0805 T/R	A 1*
R494	A11368-10011	1.KOHM .1W 1% CHIP 0805	B 1*
R495	A11368-10021	10K 1/10W 1% SMD 0805 T/R	A 1*
R496	A11368-37421	37.4K .10W 1% MF 0805	A 1*
R497	A11368-10011	1.KOHM .1W 1% CHIP 0805	A 1*
R498	A11368-10000	RES, 100 OHM 1/16W 1% 0603	A 2
R499	A11368-10000	RES, 100 OHM 1/16W 1% 0603	A 2
R600	A11368-1R004	1 OHM 0.5W 1% 2010 T/R	D 4
R601	133981-1	2.49K 0.1% 0.1W 0805 THIN FILM	C 4
R602	A11368-12411	1.24K OHM 0.1W 1% 0805 T/R	C 3*
R603	A11368-12411	1.24K OHM 0.1W 1% 0805 T/R	D 3*
R604	A11368-75R01	75.OHM 1/10W 1% SMD 0805 T/R	D 4*
R605	133852-1	POT, 50 OHM 1/4" SQ SIDE ADJ	D 2
R606	A11368-24911	2.49K 1/10W 1% SMD 0805 T/R	D 3*
R607	A11368-24911	2.49K 1/10W 1% SMD 0805 T/R	D 3*
R608	A11368-24911	2.49K 1/10W 1% SMD 0805 T/R	D 3
R609	A11368-18202	182 OHM .125W 1% 1206 T/R	D 3*
R610	A11368-10021	10K 1/10W 1% SMD 0805 T/R	D 3
R611	A11368-10021	10K 1/10W 1% SMD 0805 T/R	D 3
R612	A11368-10021	10K 1/10W 1% SMD 0805 T/R	D 3
R613	A11368-10021	10K 1/10W 1% SMD 0805 T/R	C 3
R614	A11368-10021	10K 1/10W 1% SMD 0805 T/R	C 3
R615	130966-1	2.87K 0.1W 0.1% 0805 THIN FILM	D 3
R616	A11368-24911	2.49K 1/10W 1% SMD 0805 T/R	C 3*
R617	A11368-42211	4.22KOHM .1W 1% 0805 T/R	C 3*
R618	A11368-68101	681 OHM 1% 0.1W 0805 T/R	C 3*
R619	A11368-82511	8.25KOHM .1W 1% CHIP 0805	C 3*
R620	A11368-82511	8.25KOHM .1W 1% CHIP 0805	C 3*
R621	A11368-57611	5.76K OHM 0.1W 1% 0805 T/R	C 3*
R622	A11368-24911	2.49K 1/10W 1% SMD 0805 T/R	C 3*
R623	A11368-24331	243KOHM 1/10W 1% SMD 0805 T/R	D 3
R624	A11368-41211	4.12K OHM 0.1W 1% 0805 T/R	C 3*

R625	A11368-49921	49.9KOHM .1W 1% CHIP 0805	C 3*
R626	A11368-10011	1.KOHM .1W 1% CHIP 0805	C 3*
R627	A11368-10011	1.KOHM .1W 1% CHIP 0805	C 3*
R628	A11368-10011	1.KOHM .1W 1% CHIP 0805	C 3
R629	A11368-10011	1.KOHM .1W 1% CHIP 0805	C 3
R630	A11368-10021	10K 1/10W 1% SMD 0805 T/R	C 3*
R631	A11368-10021	10K 1/10W 1% SMD 0805 T/R	C 3*
R632	A11368-10021	10K 1/10W 1% SMD 0805 T/R	C 3*
R633	A11368-10021	10K 1/10W 1% SMD 0805 T/R	C 3*
R634	A11368-10021	10K 1/10W 1% SMD 0805 T/R	C 3*
R635	A11368-10021	10K 1/10W 1% SMD 0805 T/R	C 3*
R636	A11368-10021	10K 1/10W 1% SMD 0805 T/R	B 2
R637	A11368-26721	26.7KOHM .1W 1% 0805 T/R	B 2*
R638	A11368-10021	10K 1/10W 1% SMD 0805 T/R	C 2*
R639	A11368-10021	10K 1/10W 1% SMD 0805 T/R	C 2
R640	A11368-30121	30.1K, 0.10W 1% MF 0805	C 2*
R641	A11368-20021	20.KOHM .1W 1% CHIP 0805	C 2*
R642	127682-1	4.99K 0.1% 1206 THIN FILM T/R	C 3*
R643	127682-1	4.99K 0.1% 1206 THIN FILM T/R	C 3*
R644	A11368-24911	2.49K 1/10W 1% SMD 0805 T/R	A 3*
R645	A11368-49911	4.99K 1/10W 1% SMD 0805 T/R	A 3*
R646	A11368-24911	2.49K 1/10W 1% SMD 0805 T/R	A 3*
R647	A11368-10001	100 OHM 1% 0805 RES T/R	A 3*
R648	A11368-10001	100 OHM 1% 0805 RES T/R	A 3*
R649	A11368-10011	1.KOHM .1W 1% CHIP 0805	A 3*
R650	A11368-22R11	22.1 OHM 0.1W 1% 0805 T/R	A 3*
R651	A11368-51101	RES, 511 OHM 1% 0.1W 0805	A 4
R652	A11368-75R01	75.OHM 1/10W 1% SMD 0805 T/R	A 4*
R653	A11368-75R01	75.OHM 1/10W 1% SMD 0805 T/R	A 4*
R654	A11368-24911	2.49K 1/10W 1% SMD 0805 T/R	A 3*
R655	A11368-24911	2.49K 1/10W 1% SMD 0805 T/R	A 3*
R656	A11368-49911	4.99K 1/10W 1% SMD 0805 T/R	A 3*
R657	A11368-10001	100 OHM 1% 0805 RES T/R	A 3*
R658	A11368-10001	100 OHM 1% 0805 RES T/R	A 3*
R659	A11368-10011	1.KOHM .1W 1% CHIP 0805	A 3*
R660	A11368-22R11	22.1 OHM 0.1W 1% 0805 T/R	A 3*
R661	A11368-75R01	75.OHM 1/10W 1% SMD 0805 T/R	A 4*
R662	A11368-75R01	75.OHM 1/10W 1% SMD 0805 T/R	A 4*
R663	A11368-10011	1.KOHM .1W 1% CHIP 0805	A 4*
R664	A11368-49911	4.99K 1/10W 1% SMD 0805 T/R	A 4
R665	A11368-10021	10K 1/10W 1% SMD 0805 T/R	A 4*
R666	A11368-10021	10K 1/10W 1% SMD 0805 T/R	A 3*
R667	A11368-30921	30.9K OHM .1W 1% 0805 T/R	A 3*
R668	A11368-30111	3.01K 1/10W 1% SMD 0805 T/R	A 3
R669	A11368-22131	221 KOHM .1W 1% 0805 T/R	A 3*
R670	A11368-10021	10K 1/10W 1% SMD 0805 T/R	A 3*
R671	A11368-10021	10K 1/10W 1% SMD 0805 T/R	A 3*
R672	A11368-24331	243KOHM 1/10W 1% SMD 0805 T/R	A 2*
R673	A11368-49931	499KOHM .1W 1% 0805 T/R	A 4*
R674	A11368-22R11	22.1 OHM 0.1W 1% 0805 T/R	B 3*
R675	A11368-10011	1.KOHM .1W 1% CHIP 0805	B 3*

R676	A11368-10021	10K 1/10W 1% SMD 0805 T/R	B 3*
R677	A11368-10021	10K 1/10W 1% SMD 0805 T/R	B 3*
R678	A11368-1R001	1 OHM .1W 1% 0805 T/R	B 3*
R679	A11368-49911	4.99K 1/10W 1% SMD 0805 T/R	B 3*
R680	A11368-10021	10K 1/10W 1% SMD 0805 T/R	B 3*
R681	A11368-20511	RES, 2.05KOHM 1% 0.1W 0805	B 3*
R682	A11368-51101	RES, 511 OHM 1% 0.1W 0805	B 3*
R683	A11368-10001	100 OHM 1% 0805 RES T/R	B 2*
R684	A11368-27412	2.74 KOHM .125W 1% 1206 T/R	B 2
R685	A11368-21521	21.5 KOHM .1W 1% 0805 T/R	B 2*
R686	A11368-75R01	75.OHM 1/10W 1% SMD 0805 T/R	B 3
R687	A11368-54911	5.49K 0.1W 1% 0805 T/R	B 3*
R688	A11368-10011	1.KOHM .1W 1% CHIP 0805	B 2
R689	A11368-49R91	RES, 49.9 OHM 1% 0.1W SMT 0805	B 3
R690	A11368-76801	RES, 768 OHM 1% 0.1W 0805	B 3*
R691	A11368-10001	100 OHM 1% 0805 RES T/R	A 3*
R692	A11368-49911	4.99K 1/10W 1% SMD 0805 T/R	B 2*
R693	A11368-24R91	RES, 24.9 OHM 1% 0.1W 0805	A 3
R694	A11368-24R91	RES, 24.9 OHM 1% 0.1W 0805	A 3*
R695	A11368-49911	4.99K 1/10W 1% SMD 0805 T/R	B 3
R696	A11368-82501	RES, 825 OHM 1% 0.1W 0805	B 3*
R697	A11368-15021	15.0K, 0.10W 1% MF 0805	B 3*
R698	A11368-68111	6.81K 0.10W 1% CHIP 0805	B 3*
R699	A11368-15021	15.0K, 0.10W 1% MF 0805	B 3*
R700	A11368-15031	150K 1/10W 1% SMD 0805 T/R	B 3*
R701		OPEN	B 3*
R702		OPEN	B 3*
R703	A11368-10021	10K 1/10W 1% SMD 0805 T/R	B 3*
R704	A11368-61921	61.9 KOHM 0.1W 1% 0805	B 3*
R705	A11368-44221	44.2K 0.1W 1% 0805 T/R	D 4
R706	A11368-10711	1.07KOHM .1W 1% 0805 T/R	D 4
R707	A11368-10R01	10 OHM .1W 1% 0805 T/R	D 4*
R708	A11368-15031	150K 1/10W 1% SMD 0805 T/R	D 3*
R709	A11368-10001	100 OHM 1% 0805 RES T/R	D 4
R710	A11368-20021	20.KOHM .1W 1% CHIP 0805	D 4
R711	A11368-20031	200K 0.1W 1% SMD CHIP 0805	D 3*
R712	A11368-12741	1.27MOHM .1W 1% 0805 T/R	D 4
R713	A11368-40211	4.02K 1/10W 1% SMD 0805 T/R	D 3*
R714	133854-1	POT, 10 KOHM 1/4" SQ SIDE ADJ	D 2
R715	A11368-11531	115K 1/10W 1% SMD 0805 T/R	D 3*
R716	A11368-10021	10K 1/10W 1% SMD 0805 T/R	D 4*
R717	A11368-20021	20.KOHM .1W 1% CHIP 0805	D 4*
R718	A11368-10021	10K 1/10W 1% SMD 0805 T/R	D 4
R719	A11368-10021	10K 1/10W 1% SMD 0805 T/R	D 4
R720	A11368-78721	78.7KOHM 0.1W 1% 0805 T/R	D 4*
R721	133853-1	POT, 100 OHM 1/4" SQ SIDE ADJ	D 2
R722	A11368-75R01	75.OHM 1/10W 1% SMD 0805 T/R	B 3
R723	A11368-30121	30.1K, 0.10W 1% MF 0805	D 3*
R724	A11368-15021	15.0K, 0.10W 1% MF 0805	C 4*
R725	A11368-10021	10K 1/10W 1% SMD 0805 T/R	D 3*
R726	A11368-28021	RES, 28K 1% .1W SMT 0805	D 3*

R727	A11368-49911	4.99K 1/10W 1% SMD 0805 T/R	D 3
R728	A11368-33221	33.2KOHM .1W 1% 0805 T/R	D 3
R729	A11368-17821	17.8 KOHM 1% 0.1W 0805 T/R	D 3*
R730	A11368-10021	10K 1/10W 1% SMD 0805 T/R	D 3
R731	A11368-20021	20.KOHM .1W 1% CHIP 0805	A 2*
R732	A11368-10031	100.KOHM .1W 1% CHIP 0805	A 2*
R733	A11368-10011	1.KOHM .1W 1% CHIP 0805	A 2*
R734	A11368-10041	1M OHM .1W 1% CHIP 0805	B 3*
R735	A11368-41221	41.2K OHM 0.1W 1% 0805 T/R	C 2*
R736	A11368-41211	4.12K OHM 0.1W 1% 0805 T/R	C 2*
R737	A11368-31611	3.16K 0.1W 1% 0805 T/R	C 3*
R738	A11368-61901	619.OHM 1/10W 1% SMD 0805 T/R	C 3
R739	A11368-76801	RES, 768 OHM 1% 0.1W 0805	D 3
R740	A11368-41221	41.2K OHM 0.1W 1% 0805 T/R	C 3*
R741	A11368-10011	1.KOHM .1W 1% CHIP 0805	C 3*
R1404	A11368-10021	10K 1/10W 1% SMD 0805 T/R	A 2*
R1405	A11368-10020	RES, 10.0 KOHM 1/16W 1% 0603	A 2
R1406	A11368-10021	10K 1/10W 1% SMD 0805 T/R	A 2*
R1407	A11368-10021	10K 1/10W 1% SMD 0805 T/R	A 2*
R1408	A11368-10011	1.KOHM .1W 1% CHIP 0805	A 2*
R1409	A11368-10011	1.KOHM .1W 1% CHIP 0805	A 2*
R1410	A11368-18721	18.7KOHM 0.10W 1% SMT 0805	E 2
R1411	A11368-18721	18.7KOHM 0.10W 1% SMT 0805	E 2
R1412	A11368-37421	37.4K .10W 1% MF 0805	F 2
R1413	A11368-18721	18.7KOHM 0.10W 1% SMT 0805	F 2
R1414	A11368-10020	RES, 10.0 KOHM 1/16W 1% 0603	M 1
R1415	A11368-33R20	RES, 33.2 OHM 1/16W 1% 0603	M 1
R1416	A11368-10021	10K 1/10W 1% SMD 0805 T/R	B 2*
R1417	A11368-10021	10K 1/10W 1% SMD 0805 T/R	B 2*
R1418		OPEN	H 1
R1420		OPEN	B 2
R1421		OPEN	C 2
R1422		OPEN	A 2*
R1423		OPEN	A 2*
R600X	A11368-1R004	1 OHM 0.5W 1% 2010 T/R	H 4
R601X	133981-1	2.49K 0.1% 0.1W 0805 THIN FILM	H 4
R602X	A11368-12411	1.24K OHM 0.1W 1% 0805 T/R	H 3*
R603X	A11368-12411	1.24K OHM 0.1W 1% 0805 T/R	H 3*
R604X	A11368-75R01	75.OHM 1/10W 1% SMD 0805 T/R	H 4*
R605X	133852-1	POT, 50 OHM 1/4" SQ SIDE ADJ	I 2
R606X	A11368-24911	2.49K 1/10W 1% SMD 0805 T/R	H 3*
R607X	A11368-24911	2.49K 1/10W 1% SMD 0805 T/R	H 3*
R608X	A11368-24911	2.49K 1/10W 1% SMD 0805 T/R	H 3
R609X	A11368-18202	182 OHM .125W 1% 1206 T/R	H 3*
R610X	A11368-10021	10K 1/10W 1% SMD 0805 T/R	H 3
R611X	A11368-10021	10K 1/10W 1% SMD 0805 T/R	H 3
R612X	A11368-10021	10K 1/10W 1% SMD 0805 T/R	H 3
R613X	A11368-10021	10K 1/10W 1% SMD 0805 T/R	H 3
R614X	A11368-10021	10K 1/10W 1% SMD 0805 T/R	H 3
R615X	130966-1	2.87K 0.1W 0.1% 0805 THIN FILM	H 3
R616X	A11368-24911	2.49K 1/10W 1% SMD 0805 T/R	H 3*

R617X	A11368-42211	4.22KOHM .1W 1% 0805 T/R	H 3*
R618X	A11368-68101	681 OHM 1% 0.1W 0805 T/R	H 3*
R619X	A11368-82511	8.25KOHM .1W 1% CHIP 0805	H 3*
R620X	A11368-82511	8.25KOHM .1W 1% CHIP 0805	H 3*
R621X	A11368-57611	5.76K OHM 0.1W 1% 0805 T/R	H 3*
R622X	A11368-24911	2.49K 1/10W 1% SMD 0805 T/R	H 3*
R623X	A11368-24331	243KOHM 1/10W 1% SMD 0805 T/R	H 3
R624X	A11368-41211	4.12K OHM 0.1W 1% 0805 T/R	G 3*
R625X	A11368-49921	49.9KOHM .1W 1% CHIP 0805	G 3*
R626X	A11368-10011	1.KOHM .1W 1% CHIP 0805	H 3*
R627X	A11368-10011	1.KOHM .1W 1% CHIP 0805	H 3*
R628X	A11368-10011	1.KOHM .1W 1% CHIP 0805	H 3
R629X	A11368-10011	1.KOHM .1W 1% CHIP 0805	H 3
R630X	A11368-10021	10K 1/10W 1% SMD 0805 T/R	H 3*
R631X	A11368-10021	10K 1/10W 1% SMD 0805 T/R	H 3*
R632X	A11368-10021	10K 1/10W 1% SMD 0805 T/R	H 3*
R633X	A11368-10021	10K 1/10W 1% SMD 0805 T/R	H 3*
R634X	A11368-10021	10K 1/10W 1% SMD 0805 T/R	H 3*
R635X	A11368-10021	10K 1/10W 1% SMD 0805 T/R	H 3*
R636X	A11368-10021	10K 1/10W 1% SMD 0805 T/R	G 2
R637X	A11368-26721	26.7KOHM .1W 1% 0805 T/R	G 2*
R638X	A11368-10021	10K 1/10W 1% SMD 0805 T/R	G 2*
R639X	A11368-10021	10K 1/10W 1% SMD 0805 T/R	H 2
R640X	A11368-30121	30.1K, 0.10W 1% MF 0805	H 2*
R641X	A11368-20021	20.KOHM .1W 1% CHIP 0805	H 2*
R642X	127682-1	4.99K 0.1% 1206 THIN FILM T/R	G 3*
R643X	127682-1	4.99K 0.1% 1206 THIN FILM T/R	G 3*
R644X	A11368-24911	2.49K 1/10W 1% SMD 0805 T/R	E 3*
R645X	A11368-49911	4.99K 1/10W 1% SMD 0805 T/R	E 3*
R646X	A11368-24911	2.49K 1/10W 1% SMD 0805 T/R	F 3*
R647X	A11368-10001	100 OHM 1% 0805 RES T/R	E 3*
R648X	A11368-10001	100 OHM 1% 0805 RES T/R	F 3*
R649X	A11368-10011	1.KOHM .1W 1% CHIP 0805	E 3*
R650X	A11368-22R11	22.1 OHM 0.1W 1% 0805 T/R	E 3*
R651X	A11368-51101	RES, 511 OHM 1% 0.1W 0805	E 4
R652X	A11368-75R01	75.OHM 1/10W 1% SMD 0805 T/R	F 4*
R653X	A11368-75R01	75.OHM 1/10W 1% SMD 0805 T/R	F 4*
R654X	A11368-24911	2.49K 1/10W 1% SMD 0805 T/R	F 3*
R655X	A11368-24911	2.49K 1/10W 1% SMD 0805 T/R	F 3*
R656X	A11368-49911	4.99K 1/10W 1% SMD 0805 T/R	F 3*
R657X	A11368-10001	100 OHM 1% 0805 RES T/R	F 3*
R658X	A11368-10001	100 OHM 1% 0805 RES T/R	F 3*
R659X	A11368-10011	1.KOHM .1W 1% CHIP 0805	F 3*
R660X	A11368-22R11	22.1 OHM 0.1W 1% 0805 T/R	F 3*
R661X	A11368-75R01	75.OHM 1/10W 1% SMD 0805 T/R	F 4*
R662X	A11368-75R01	75.OHM 1/10W 1% SMD 0805 T/R	F 4*
R663X	A11368-10011	1.KOHM .1W 1% CHIP 0805	F 4*
R664X	A11368-49911	4.99K 1/10W 1% SMD 0805 T/R	F 4
R665X	A11368-10021	10K 1/10W 1% SMD 0805 T/R	E 4*
R666X	A11368-10021	10K 1/10W 1% SMD 0805 T/R	E 3*
R667X	A11368-30921	30.9K OHM .1W 1% 0805 T/R	F 3*

R668X	A11368-30111	3.01K 1/10W 1% SMD 0805 T/R	F 3
R669X	A11368-22131	221 KOHM .1W 1% 0805 T/R	F 3*
R670X	A11368-10021	10K 1/10W 1% SMD 0805 T/R	F 3*
R671X	A11368-10021	10K 1/10W 1% SMD 0805 T/R	E 3*
R672X	A11368-24331	243KOHM 1/10W 1% SMD 0805 T/R	E 2*
R673X	A11368-49931	499KOHM .1W 1% 0805 T/R	F 4*
R674X	A11368-22R11	22.1 OHM 0.1W 1% 0805 T/R	G 3*
R675X	A11368-10011	1.KOHM .1W 1% CHIP 0805	G 3*
R676X	A11368-10021	10K 1/10W 1% SMD 0805 T/R	G 3*
R677X	A11368-10021	10K 1/10W 1% SMD 0805 T/R	G 3*
R678X	A11368-1R001	1 OHM .1W 1% 0805 T/R	G 3*
R679X	A11368-49911	4.99K 1/10W 1% SMD 0805 T/R	G 3*
R680X	A11368-10021	10K 1/10W 1% SMD 0805 T/R	G 3*
R681X	A11368-20511	RES, 2.05KOHM 1% 0.1W 0805	G 3*
R682X	A11368-51101	RES, 511 OHM 1% 0.1W 0805	G 3*
R683X	A11368-10001	100 OHM 1% 0805 RES T/R	G 2*
R684X	A11368-27412	2.74 KOHM .125W 1% 1206 T/R	F 2
R685X	A11368-21521	21.5 KOHM .1W 1% 0805 T/R	F 2*
R686X	A11368-75R01	75.OHM 1/10W 1% SMD 0805 T/R	G 3
R687X	A11368-54911	5.49K 0.1W 1% 0805 T/R	F 3*
R688X	A11368-10011	1.KOHM .1W 1% CHIP 0805	F 2
R689X	A11368-49R91	RES, 49.9 OHM 1% 0.1W SMT 0805	F 3
R690X	A11368-76801	RES, 768 OHM 1% 0.1W 0805	F 3*
R691X	A11368-10001	100 OHM 1% 0805 RES T/R	F 3*
R692X	A11368-49911	4.99K 1/10W 1% SMD 0805 T/R	F 2*
R693X	A11368-24R91	RES, 24.9 OHM 1% 0.1W 0805	F 3
R694X	A11368-24R91	RES, 24.9 OHM 1% 0.1W 0805	F 3*
R695X	A11368-49911	4.99K 1/10W 1% SMD 0805 T/R	F 3
R696X	A11368-82501	RES, 825 OHM 1% 0.1W 0805	G 3*
R697X	A11368-15021	15.0K, 0.10W 1% MF 0805	G 3*
R698X	A11368-68111	6.81K 0.10W 1% CHIP 0805	F 3*
R699X	A11368-15021	15.0K, 0.10W 1% MF 0805	G 3*
R700X	A11368-15031	150K 1/10W 1% SMD 0805 T/R	G 3*
R701X		OPEN	G 3*
R702X		OPEN	G 3*
R703X	A11368-10021	10K 1/10W 1% SMD 0805 T/R	F 3*
R704X	A11368-61921	61.9 KOHM 0.1W 1% 0805	F 3*
R705X	A11368-44221	44.2K 0.1W 1% 0805 T/R	H 4
R706X	A11368-10711	1.07KOHM .1W 1% 0805 T/R	H 4
R707X	A11368-10R01	10 OHM .1W 1% 0805 T/R	H 4*
R708X	A11368-15031	150K 1/10W 1% SMD 0805 T/R	I 3*
R709X	A11368-10001	100 OHM 1% 0805 RES T/R	H 4
R710X	A11368-20021	20.KOHM .1W 1% CHIP 0805	I 4
R711X	A11368-20031	200K 0.1W 1% SMD CHIP 0805	I 3*
R712X	A11368-12741	1.27MOHM .1W 1% 0805 T/R	I 4
R713X	A11368-40211	4.02K 1/10W 1% SMD 0805 T/R	I 3*
R714X	133854-1	POT, 10 KOHM 1/4" SQ SIDE ADJ	H 2
R715X	A11368-11531	115K 1/10W 1% SMD 0805 T/R	I 3*
R716X	A11368-10021	10K 1/10W 1% SMD 0805 T/R	I 4*
R717X	A11368-20021	20.KOHM .1W 1% CHIP 0805	I 4*
R718X	A11368-10021	10K 1/10W 1% SMD 0805 T/R	I 4

R719X	A11368-10021	10K 1/10W 1% SMD 0805 T/R	I 4
R720X	A11368-78721	78.7KOHM 0.1W 1% 0805 T/R	I 4*
R721X	133853-1	POT, 100 OHM 1/4" SQ SIDE ADJ	I 2
R722X	A11368-75R01	75.OHM 1/10W 1% SMD 0805 T/R	G 3
R723X	A11368-30121	30.1K, 0.10W 1% MF 0805	I 3*
R724X	A11368-15021	15.0K, 0.10W 1% MF 0805	G 4*
R725X	A11368-10021	10K 1/10W 1% SMD 0805 T/R	I 3*
R726X	A11368-28021	RES, 28K 1% .1W SMT 0805	I 3*
R727X	A11368-49911	4.99K 1/10W 1% SMD 0805 T/R	I 3
R728X	A11368-33221	33.2KOHM .1W 1% 0805 T/R	I 3
R729X	A11368-17821	17.8 KOHM 1% 0.1W 0805 T/R	H 3*
R730X	A11368-10021	10K 1/10W 1% SMD 0805 T/R	H 3
R731X	A11368-20021	20.KOHM .1W 1% CHIP 0805	F 2*
R732X	A11368-10031	100.KOHM .1W 1% CHIP 0805	F 2*
R733X	A11368-10011	1.KOHM .1W 1% CHIP 0805	F 2*
R734X	A11368-10041	1M OHM .1W 1% CHIP 0805	G 3*
R735X	A11368-41221	41.2K OHM 0.1W 1% 0805 T/R	H 2*
R736X	A11368-41211	4.12K OHM 0.1W 1% 0805 T/R	H 2*
R737X	A11368-31611	3.16K 0.1W 1% 0805 T/R	H 3*
R738X	A11368-61901	619.OHM 1/10W 1% SMD 0805 T/R	H 3
R739X	A11368-76801	RES, 768 OHM 1% 0.1W 0805	H 3
R740X	A11368-41221	41.2K OHM 0.1W 1% 0805 T/R	H 3*
R741X	A11368-10011	1.KOHM .1W 1% CHIP 0805	G 3*
RT400	133188-1	THERMISTOR, 20K NTC 0805 SMT	F 2
S400	127059-1	SWITCH, SPST 6MM SMT	D 1
S401	136684-1	SWITCH, DPDT 2.2MM LATCHING PB	M 1
S402	136731-1	SWITCH,DPDT 2.2MM MOMENTARY PB	E 1
S403	136731-1	SWITCH,DPDT 2.2MM MOMENTARY PB	F 1
S404	136731-1	SWITCH,DPDT 2.2MM MOMENTARY PB	G 1
S405	136386-1	ENCODER, ROTARY 2 BIT W/SWITCH	D 1
S406	136386-1	ENCODER, ROTARY 2 BIT W/SWITCH	H 1
S407	127059-1	SWITCH, SPST 6MM SMT	A 1
TP400		OPEN	B 1
TP401		OPEN	B 1
TP402		OPEN	B 1
TP403		OPEN	B 1
TP404		OPEN	B 1
TP405		OPEN	B 1
TP406		OPEN	B 1
TP407		OPEN	B 1
TP408		OPEN	B 1
TP409		OPEN	B 1
TP410		OPEN	B 1
TP411		OPEN	B 1
TP412		OPEN	B 1
TP413		OPEN	B 1
TP414		OPEN	B 1
TP415		OPEN	B 1
TP416		OPEN	B 1
TP417		OPEN	B 1
TP418		OPEN	B 1

TP419		OPEN	B 1
TP420		OPEN	B 1
TP421		OPEN	B 1
TP422		OPEN	B 1
TP423		OPEN	B 1
TP424		OPEN	B 1
TP425		OPEN	B 1
TP426		OPEN	B 1
TP427		OPEN	B 1
TP428		OPEN	B 1
TP429		OPEN	B 1
TP430		OPEN	B 1
TP431		OPEN	B 1
TP432		OPEN	B 1
TP433		OPEN	B 1
TP434		OPEN	B 1
TP435		OPEN	B 1
TP436		OPEN	B 1
TP437		OPEN	B 1
TP438		OPEN	B 1
TP439		OPEN	B 1
TP440		OPEN	B 1
TP441		OPEN	B 1
TP442		OPEN	B 1
TP443		OPEN	B 1
TP444		OPEN	B 1
TP445		OPEN	B 1
TP446		OPEN	B 1
TP447		OPEN	B 1
TP448		OPEN	B 1
TP449		OPEN	B 1
TP450		OPEN	B 1
TP451		OPEN	B 1
TP452		OPEN	B 1
TP453		OPEN	B 1
TP454		OPEN	B 1
TP455		OPEN	B 1
TP456		OPEN	B 1
TP600	127064-1	TEST POINT, SMT 1206	D 3
TP601		OPEN	C 3
TP602		OPEN	A 3*
TP603		OPEN	A 3*
TP604		OPEN	A 3*
TP605		OPEN	A 3*
TP606		OPEN	A 3*
TP607		OPEN	A 3*
TP608		OPEN	A 3*
TP609		OPEN	A 3*
TP610		OPEN	C 3
TP611	127064-1	TEST POINT, SMT 1206	A 3
TP612		OPEN	D 3

TP613		OPEN	B 4
TP600X	127064-1	TEST POINT, SMT 1206	H 3
TP601X		OPEN	G 3
TP602X		OPEN	E 3*
TP603X		OPEN	F 3*
TP604X		OPEN	F 3*
TP605X		OPEN	F 3*
TP606X		OPEN	E 3*
TP607X		OPEN	F 3*
TP608X		OPEN	F 3*
TP609X		OPEN	F 3*
TP610X		OPEN	G 3
TP611X	127064-1	TEST POINT, SMT 1206	F 3
TP612X		OPEN	I 3
TP613X		OPEN	F 4
U400	126265-1	IC, MC14489 DISP DRIVER SOIC	G 1
U401	136510-2	MCU, MMC2114 MCORE BGA	B 1
U402	136936-1	IC, 74ACT244 TSSOP-20	B 2
U404	134414-1	EEPROM, SERIAL 8K X 8 SMT	D 1
U405	126556-1	OP AMP, LM324ADR SOIC-14 QUAD	A 2
U406	135214-1	IC, LM2671 5V SWITCHING REGULATOR SOIC8	D 2
U407	132059-1	REG, +3.3V LDO 2% SO-8	E 1
U600	C 9012-3	OP AMP, QUAD LO NOISE MC33079D	C 3
U601	125868-1	OP AMP TL074CD SMT	C 2
U602	126548-1	COMPARATOR, LM361 HI SPD SO-14	A 3
U603	126548-1	COMPARATOR, LM361 HI SPD SO-14	A 3
U604	130970-1	74ACT08D QUAD 2 INPUT AND GATE	A 3
U605	130970-1	74ACT08D QUAD 2 INPUT AND GATE	A 3
U606	126561-1	REG, +5V LOW POWER SO-8	A 4
U607	126561-1	REG, +5V LOW POWER SO-8	A 4
U608	125868-1	OP AMP TL074CD SMT	D 3
U609	C 9038-8	COMPARATOR, QUAD LM339D SO-14	A 2
U610	C 9038-8	COMPARATOR, QUAD LM339D SO-14	C 2
U611	C 9012-3	OP AMP, QUAD LO NOISE MC33079D	B 3
U612	126561-1	REG, +5V LOW POWER SO-8	C 3
U613	C10344-7	74HC74AD DUAL D FLIP FLOP SOIC	B 3
U614	100851-1	HEX INVERTER, 74AC04 14P SOIC	B 3
U600X	C 9012-3	OP AMP, QUAD LO NOISE MC33079D	H 3
U601X	125868-1	OP AMP TL074CD SMT	G 2
U602X	126548-1	COMPARATOR, LM361 HI SPD SO-14	E 3
U603X	126548-1	COMPARATOR, LM361 HI SPD SO-14	F 3
U604X	130970-1	74ACT08D QUAD 2 INPUT AND GATE	F 3
U605X	130970-1	74ACT08D QUAD 2 INPUT AND GATE	F 3
U606X	126561-1	REG, +5V LOW POWER SO-8	E 4
U607X	126561-1	REG, +5V LOW POWER SO-8	F 4
U608X	125868-1	OP AMP TL074CD SMT	I 3
U609X	C 9038-8	COMPARATOR, QUAD LM339D SO-14	F 2
U610X	C 9038-8	COMPARATOR, QUAD LM339D SO-14	H 2
U611X	C 9012-3	OP AMP, QUAD LO NOISE MC33079D	G 3
U612X	126561-1	REG, +5V LOW POWER SO-8	G 3
U613X	C10344-7	74HC74AD DUAL D FLIP FLOP SOIC	G 3

U614X	100851-1	HEX INVERTER, 74AC04 14P SOIC	G 3
Y400	131114-1	CRYSTAL, 4MHZ SMD	A 1

137075-10 IT4000 Panel 2 REVISION HISTORY					
E.C.N	REV	DESCRIPTION	DATE	DWN	PE
	A	INITIAL RELEASE DERIVED FROM 137075-7 REV. A WITH THE FOLLOWING CHANGES: CHANGED ALL COMPONENTS TO OPEN ON POWER SUPPLY GATE DRIVE BOARDS. CHANGED ALL	06/22/05	KLW	AA

UNLESS OTHERWISE SPECIFIED, THIS PRINTED WIRING ASSEMBLY SHALL MEET THE SPECIFICATION DESCRIBED IN IPC-A-610C CLASS 2 STANDARDS.

NOTES:

1. PRINTED WIRING BOARD PART NUMBER 136540-6.
2. SEE 137075-10_A.TIF FOR SCHEMATIC AND BOARD MAP
3. ALL LEADS SHALL BE TRIMMED TO 0.093" OR LESS.
   NO LEAD TRIM REQUIRED FOR 1200UF CAPACITORS (131310-2)
4. POSITION COMPONENTS AS SHOWN ON COMPONENT MAP.
5. THE PRINTED WIRING ASSEMBLY PART NUMBER FOR THIS ASSEMBLY SHALL BE MARKED ON THE PRINTED WIRING BOARD AND SHALL BE PERMANENT.
6. REMOVE SOLDER OR PREVENT SOLDER FROM ACCUMULATING IN PRINTED WIRING BOARD MOUNTING HOLES.
7. WHEN INSTALLING RESISTORS R309-314 AND R350-355 THE VENDER IDENTIFICATION TEXT SHOULD BE FACING UP.
8. AFTER INSTALLING SUPPLIED BINDING POST HARDWARE, TIGHTEN THE NUT TO 13 IN-LBS.

PWA BOARD IDENTIFIER AND DESCRIPTION	
A	BCA MAIN
B	AMPLIFIER GATE DRIVE CHANNEL 1
C	AMPLIFIER GATE DRIVE CHANNEL 2
D	OUTPUT FILTER/ OUTPUT CONNECTOR
E	INPUT
F	POWER SUPPLY GATE DRIVE CHANNEL 1
G	POWER SUPPLY GATE DRIVE CHANNEL 2
H	USP3T XLR

DWN	KLW	06/22/05	PE	06/22/05	DIST.	K	

REF. DES	CPN	DESCRIPTION	MAP LOC.
BB301	137437-1	BUSBAR, NMS BCA LEFT	N 9
BB302	137438-1	BUSBAR, NMS BCA RIGHT	M 9
BB401	137437-1	BUSBAR, NMS BCA LEFT	H 9
BB402	137438-1	BUSBAR, NMS BCA RIGHT	G 9
C260	A11369-152J2	1500PF 50V 5% NPO MLC 0805 T/R	D 14
C261	A11369-221J1	CAP, 220PF 50V 5% NPO 0603 T/R	D 14
C262	A11369-152J2	1500PF 50V 5% NPO MLC 0805 T/R	D 14
C263	A11369-221J1	CAP, 220PF 50V 5% NPO 0603 T/R	D 14
C264	A11369-152J2	1500PF 50V 5% NPO MLC 0805 T/R	C 14
C265	A11369-221J1	CAP, 220PF 50V 5% NPO 0603 T/R	B 14
C266	A11369-152J2	1500PF 50V 5% NPO MLC 0805 T/R	A 14
C267	A11369-221J1	CAP, 220PF 50V 5% NPO 0603 T/R	A 14
C268	A11427-103K1	0.01UF 50V 10% X7R MLC 0603	C 15
C269	A11427-103K1	0.01UF 50V 10% X7R MLC 0603	C 15
C300	A11369-102J2	.001UF 50V 5% NPO MLC 0805 T/R	D 3
C301	A11369-101J2	100 PF 50V 5% NPO MLC 0805 T/R	D 3
C302	A11369-101J2	100 PF 50V 5% NPO MLC 0805 T/R	D 3
C303	C10208-4	100.UF 25V 20% RAD ELECT T/R	C 3
C304	C10208-4	100.UF 25V 20% RAD ELECT T/R	C 3
C305	A11369-221J5	220PF 50V 5% NPO 1206 SMD	C 3
C306	A11369-221J5	220PF 50V 5% NPO 1206 SMD	D 3
C307	A10434-104JD	.1UF 250V 5% MTL POLY FILM T/A	A 4
C308	A10434-104JD	.1UF 250V 5% MTL POLY FILM T/A	A 2
C309	A10434-473JD	.047UF 250VDC 5% MET POLY T/A	A 2
C310	A10434-473JD	.047UF 250VDC 5% MET POLY T/A	A 1
C311	A10434-333JD	.033UF 250V 5% MTL POLY FILM	B 3
C312	A10434-333JD	.033UF 250V 5% MTL POLY FILM	B 3
C313	A10434-333JD	.033UF 250V 5% MTL POLY FILM	B 3
C314	A10434-333JD	.033UF 250V 5% MTL POLY FILM	B 3
C315	A10434-333JD	.033UF 250V 5% MTL POLY FILM	B 3
C316	A10434-333JD	.033UF 250V 5% MTL POLY FILM	B 3
C317	A10434-103JD	.01UF 250V 5%MTL POLY FILM T/A	B 3
C318	A10434-333JD	.033UF 250V 5% MTL POLY FILM	B 3
C319	A10434-333JD	.033UF 250V 5% MTL POLY FILM	B 3
C320	A10434-333JD	.033UF 250V 5% MTL POLY FILM	B 3
C321	A10434-103JD	.01UF 250V 5%MTL POLY FILM T/A	B 3
C322	A10434-104JD	.1UF 250V 5% MTL POLY FILM T/A	A 7
C323	A11369-102J2	.001UF 50V 5% NPO MLC 0805 T/R	E 3
C324	A11369-101J2	100 PF 50V 5% NPO MLC 0805 T/R	E 3
C325	A11369-101J2	100 PF 50V 5% NPO MLC 0805 T/R	E 3
C326	C10208-4	100.UF 25V 20% RAD ELECT T/R	F 3
C327	C10208-4	100.UF 25V 20% RAD ELECT T/R	E 3
C328	A11369-221J5	220PF 50V 5% NPO 1206 SMD	E 3

C329	A11369-221J5	220PF 50V 5% NPO 1206 SMD	E 3
C330	A10434-104JD	.1UF 250V 5% MTL POLY FILM T/A	E 3
C331	A10434-104JD	.1UF 250V 5% MTL POLY FILM T/A	G 2
C332	A10434-473JD	.047UF 250VDC 5% MET POLY T/A	G 2
C333	A10434-473JD	.047UF 250VDC 5% MET POLY T/A	G 1
C334	A10434-333JD	.033UF 250V 5% MTL POLY FILM	G 3
C335	A10434-333JD	.033UF 250V 5% MTL POLY FILM	G 3
C336	A10434-333JD	.033UF 250V 5% MTL POLY FILM	G 3
C337	A10434-333JD	.033UF 250V 5% MTL POLY FILM	G 3
C338	A10434-333JD	.033UF 250V 5% MTL POLY FILM	G 3
C339	A10434-333JD	.033UF 250V 5% MTL POLY FILM	G 3
C340	A10434-103JD	.01UF 250V 5%MTL POLY FILM T/A	G 3
C341	A10434-333JD	.033UF 250V 5% MTL POLY FILM	F 3
C342	A10434-333JD	.033UF 250V 5% MTL POLY FILM	F 3
C343	A10434-333JD	.033UF 250V 5% MTL POLY FILM	F 3
C344	A10434-103JD	.01UF 250V 5%MTL POLY FILM T/A	F 3
C345	A10434-104JD	.1UF 250V 5% MTL POLY FILM T/A	D 7
C346	103418-103J2	.01UF 5% 100V X7R 0805	B 7
C347	103418-103J2	.01UF 5% 100V X7R 0805	B 7
C348	103418-103J2	.01UF 5% 100V X7R 0805	C 7
C349	103418-103J2	.01UF 5% 100V X7R 0805	C 7
C350	A11427-104K2	.1UF 50V CHIP CAP 10% 0805 X7R	D 4
C351	A11427-104K2	.1UF 50V CHIP CAP 10% 0805 X7R	D 4
C352	C10208-4	100.UF 25V 20% RAD ELECT T/R	C 4
C353	C10208-4	100.UF 25V 20% RAD ELECT T/R	E 4
C354	A11427-104K2	.1UF 50V CHIP CAP 10% 0805 X7R	C 4
C355	A11427-104K2	.1UF 50V CHIP CAP 10% 0805 X7R	E 4
C356	135224-1	.001UF 10% 500V X7R MLC 1206	C 10
C357	A10434-333JD	.033UF 250V 5% MTL POLY FILM	C 10
C358	C 2288-6	0.001UF CERAMIC DISC CAP	B 9
C359	A10434-333JD	.033UF 250V 5% MTL POLY FILM	C 9
C360	135224-1	.001UF 10% 500V X7R MLC 1206	D 9
C361	A10434-333JD	.033UF 250V 5% MTL POLY FILM	B 10
C362	135224-1	.001UF 10% 500V X7R MLC 1206	C 10
C363	A10434-333JD	.033UF 250V 5% MTL POLY FILM	B 9
C364	135224-1	.001UF 10% 500V X7R MLC 1206	C 10
C365	A10434-333JD	.033UF 250V 5% MTL POLY FILM	C 9
C366	C 2288-6	0.001UF CERAMIC DISC CAP	B 9
C367	A10434-333JD	.033UF 250V 5% MTL POLY FILM	B 9
C368	A10434-333JD	.033UF 250V 5% MTL POLY FILM	C 11
C369	135224-1	.001UF 10% 500V X7R MLC 1206	C 10
C370	A10434-333JD	.033UF 250V 5% MTL POLY FILM	C 11
C371	135224-1	.001UF 10% 500V X7R MLC 1206	C 11
C372	A10434-333JD	.033UF 250V 5% MTL POLY FILM	B 11
C373	135224-1	.001UF 10% 500V X7R MLC 1206	C 10
C374	A10434-333JD	.033UF 250V 5% MTL POLY FILM	B 11
C375	C 2288-6	0.001UF CERAMIC DISC CAP	B 11
C376	A10434-333JD	.033UF 250V 5% MTL POLY FILM	B 11
C377	C 2288-6	0.001UF CERAMIC DISC CAP	B 11
C378	A10434-333JD	.033UF 250V 5% MTL POLY FILM	C 11
C379	135224-1	.001UF 10% 500V X7R MLC 1206	D 11

C380		OPEN	D 10
C381		OPEN	C 11
C382	102438-221K2	220PF 200V 10% NPO 0805 T/R	D 4
C383	102438-221K2	220PF 200V 10% NPO 0805 T/R	D 4
C500	A11369-101J2	100 PF 50V 5% NPO MLC 0805 T/R	H 7
C500X	A11369-101J2	100 PF 50V 5% NPO MLC 0805 T/R	N 7
C501		OPEN	H 7
C501X		OPEN	N 7
C502		OPEN	H 8
C502X		OPEN	N 8
C503		OPEN	H 7
C503X		OPEN	N 7
C504		OPEN	H 8
C504X		OPEN	N 8
C505		OPEN	I 8
C505X		OPEN	O 8
C506		OPEN	I 8
C506X		OPEN	O 8
C507		OPEN	I 7
C507X		OPEN	O 7
C508	A11427-104K2	.1UF 50V CHIP CAP 10% 0805 X7R	I 7
C508X	A11427-104K2	.1UF 50V CHIP CAP 10% 0805 X7R	O 7
C509	A11427-104K2	.1UF 50V CHIP CAP 10% 0805 X7R	I 6
C509X	A11427-104K2	.1UF 50V CHIP CAP 10% 0805 X7R	O 6
C510	A11427-104K2	.1UF 50V CHIP CAP 10% 0805 X7R	J 7
C510X	A11427-104K2	.1UF 50V CHIP CAP 10% 0805 X7R	P 7
C511	A11427-104K2	.1UF 50V CHIP CAP 10% 0805 X7R	I 7
C511X	A11427-104K2	.1UF 50V CHIP CAP 10% 0805 X7R	P 7
C512	A11427-104K2	.1UF 50V CHIP CAP 10% 0805 X7R	H 7
C512X	A11427-104K2	.1UF 50V CHIP CAP 10% 0805 X7R	N 7
C513	A11427-104K2	.1UF 50V CHIP CAP 10% 0805 X7R	H 7
C513X	A11427-104K2	.1UF 50V CHIP CAP 10% 0805 X7R	N 7
C514		OPEN	G 7
C514X		OPEN	M 7
C515	A11369-220J2	22 PF 5% 50V NPO CER CHIP	G 7
C515X	A11369-220J2	22 PF 5% 50V NPO CER CHIP	M 7
C516		OPEN	G 7
C516X		OPEN	M 7
C517		OPEN	G 7
C517X		OPEN	M 7
C518		OPEN	F 7
C518X		OPEN	L 7
C519		OPEN	F 7
C519X		OPEN	L 7
C520		OPEN	F 7
C520X		OPEN	L 7
C521		OPEN	E 7
C521X		OPEN	K 7
C522		OPEN	F 7
C522X		OPEN	L 7
C523	A11427-104K2	.1UF 50V CHIP CAP 10% 0805 X7R	F 7

C523X	A11427-104K2	.1UF 50V CHIP CAP 10% 0805 X7R	L 7
C524	A11427-104K2	.1UF 50V CHIP CAP 10% 0805 X7R	F 6
C524X	A11427-104K2	.1UF 50V CHIP CAP 10% 0805 X7R	L 6
C525	A11427-104K2	.1UF 50V CHIP CAP 10% 0805 X7R	F 7
C525X	A11427-104K2	.1UF 50V CHIP CAP 10% 0805 X7R	L 7
C526	130636-103J5	0.01UF 500V 5% X7R 1206 T/R	E 7
C526X	130636-103J5	0.01UF 500V 5% X7R 1206 T/R	K 7
C527	130636-103J5	0.01UF 500V 5% X7R 1206 T/R	E 7
C527X	130636-103J5	0.01UF 500V 5% X7R 1206 T/R	K 7
C528	A11427-104K2	.1UF 50V CHIP CAP 10% 0805 X7R	G 7
C528X	A11427-104K2	.1UF 50V CHIP CAP 10% 0805 X7R	M 7
C529	A11427-104K2	.1UF 50V CHIP CAP 10% 0805 X7R	F 7
C529X	A11427-104K2	.1UF 50V CHIP CAP 10% 0805 X7R	L 7
C530	A11427-104K2	.1UF 50V CHIP CAP 10% 0805 X7R	E 7
C530X	A11427-104K2	.1UF 50V CHIP CAP 10% 0805 X7R	K 7
C531	A11427-104K2	.1UF 50V CHIP CAP 10% 0805 X7R	E 7
C531X	A11427-104K2	.1UF 50V CHIP CAP 10% 0805 X7R	K 7
C800	137422-1	CAP, 0.01UF 25V 5% NPO 1206	K 5
C801	137422-1	CAP, 0.01UF 25V 5% NPO 1206	K 4
C802	A11427-103K1	0.01UF 50V 10% X7R MLC 0603	L 2
C803	A11427-103K1	0.01UF 50V 10% X7R MLC 0603	K 2
C805	A11369-101J2	100 PF 50V 5% NPO MLC 0805 T/R	K 5
C806	A11369-101J2	100 PF 50V 5% NPO MLC 0805 T/R	K 4
C811	C10466-8	.22UF 50V 5% MTL FILM RDL T/A	L 4
C815	131788-1	CAP, 0.68UF 50V 5% METAL FILM	K 4
C816	135505-1	CAP, 0.1UF 25V 10% X7R 0603	K 4
C817	135505-1	CAP, 0.1UF 25V 10% X7R 0603	K 3
C818	131788-1	CAP, 0.68UF 50V 5% METAL FILM	K 4
C819	135505-1	CAP, 0.1UF 25V 10% X7R 0603	K 3
C820	A11369-332F5	3300.PF 50V 1% NPO MLC 1206	L 2
C821	A11369-221J2	220 PF 50V 5% NPO MLC 0805 T/R	L 3
C822	A11369-221J2	220 PF 50V 5% NPO MLC 0805 T/R	L 3
C823	A11369-102J2	.001UF 50V 5% NPO MLC 0805 T/R	L 3
C824	A11369-221J2	220 PF 50V 5% NPO MLC 0805 T/R	L 3
C825	A11427-103K1	0.01UF 50V 10% X7R MLC 0603	L 3
C826	A11369-332F5	3300.PF 50V 1% NPO MLC 1206	L 3
C827	A11427-472K1	4700PF 50V 10% X7R 0603 T/R	L 3
C828	A11427-103K1	0.01UF 50V 10% X7R MLC 0603	I 5
C829	C 9465-3	10UF 50V 20% VERT ELECT T/A	I 5
C830	A11369-470K1	CAP, 47PF 50V 10% NPO 0603 T/R	I 5
C831	A11369-102J2	.001UF 50V 5% NPO MLC 0805 T/R	I 4
C832	135505-1	CAP, 0.1UF 25V 10% X7R 0603	I 5
C833	126551-1	100UF 25V ELCAP SMD	I 5
C834	A11427-223J2	.022UF 50V 5% X7R 0805 T/R	L 4
C835	A11427-223J2	.022UF 50V 5% X7R 0805 T/R	K 4
C836	137422-1	CAP, 0.01UF 25V 5% NPO 1206	K 5
C837	137422-1	CAP, 0.01UF 25V 5% NPO 1206	K 4
C838	A11427-223J2	.022UF 50V 5% X7R 0805 T/R	K 4
C839	A11427-223J2	.022UF 50V 5% X7R 0805 T/R	K 4
C840	A11427-223J2	.022UF 50V 5% X7R 0805 T/R	K 3
C841	A11369-101J2	100 PF 50V 5% NPO MLC 0805 T/R	K 5

C842	A11369-101J2	100 PF 50V 5% NPO MLC 0805 T/R	K 4
C843	A11427-223J2	.022UF 50V 5% X7R 0805 T/R	K 3
C844	135505-1	CAP, 0.1UF 25V 10% X7R 0603	L 4
C845	135505-1	CAP, 0.1UF 25V 10% X7R 0603	L 5
C846	C10466-8	.22UF 50V 5% MTL FILM RDL T/A	K 4
C849	131788-1	CAP, 0.68UF 50V 5% METAL FILM	K 3
C850	135505-1	CAP, 0.1UF 25V 10% X7R 0603	K 3
C851	135505-1	CAP, 0.1UF 25V 10% X7R 0603	K 2
C852	131788-1	CAP, 0.68UF 50V 5% METAL FILM	K 3
C853	135505-1	CAP, 0.1UF 25V 10% X7R 0603	K 3
C854	A11369-332F5	3300.PF 50V 1% NPO MLC 1206	J 2
C855	A11369-221J2	220 PF 50V 5% NPO MLC 0805 T/R	J 3
C856	A11369-221J2	220 PF 50V 5% NPO MLC 0805 T/R	J 3
C857	A11369-221J2	220 PF 50V 5% NPO MLC 0805 T/R	K 3
C858	A11369-102J2	.001UF 50V 5% NPO MLC 0805 T/R	J 3
C859	A11369-332F5	3300.PF 50V 1% NPO MLC 1206	J 3
C860	A11427-472K1	4700PF 50V 10% X7R 0603 T/R	J 3
C861	A11427-103K1	0.01UF 50V 10% X7R MLC 0603	H 5
C862	C 9465-3	10UF 50V 20% VERT ELECT T/A	H 5
C863	A11369-470K1	CAP, 47PF 50V 10% NPO 0603 T/R	H 5
C864	A11369-102J2	.001UF 50V 5% NPO MLC 0805 T/R	H 4
C865	135505-1	CAP, 0.1UF 25V 10% X7R 0603	H 5
C866	126551-1	100UF 25V ELCAP SMD	J 5
C869	130615-1	CAP, 1UF 16V X7R 10% 1206 SMT	I 3
C870	130615-1	CAP, 1UF 16V X7R 10% 1206 SMT	I 3
C871	130615-1	CAP, 1UF 16V X7R 10% 1206 SMT	I 3
C872	130615-1	CAP, 1UF 16V X7R 10% 1206 SMT	H 3
C873	130615-1	CAP, 1UF 16V X7R 10% 1206 SMT	I 3
C876	135505-1	CAP, 0.1UF 25V 10% X7R 0603	H 2
C877	135505-1	CAP, 0.1UF 25V 10% X7R 0603	I 2
C878	135505-1	CAP, 0.1UF 25V 10% X7R 0603	H 3
C879	135505-1	CAP, 0.1UF 25V 10% X7R 0603	H 2
C880	135505-1	CAP, 0.1UF 25V 10% X7R 0603	I 2
C881	135505-1	CAP, 0.1UF 25V 10% X7R 0603	H 2
C882	135505-1	CAP, 0.1UF 25V 10% X7R 0603	H 2
C891	A11369-470K1	CAP, 47PF 50V 10% NPO 0603 T/R	J 4
C892	A11369-470K1	CAP, 47PF 50V 10% NPO 0603 T/R	I 4
C893	A11427-103K1	0.01UF 50V 10% X7R MLC 0603	L 1
C894	A11427-103K1	0.01UF 50V 10% X7R MLC 0603	I 1
C895	A11427-104K2	.1UF 50V CHIP CAP 10% 0805 X7R	L 4
C896	A11427-104K2	.1UF 50V CHIP CAP 10% 0805 X7R	L 5
C897	126551-1	100UF 25V ELCAP SMD	L 4
C898	126551-1	100UF 25V ELCAP SMD	L 5
C899	135505-1	CAP, 0.1UF 25V 10% X7R 0603	J 5
C900	135505-1	CAP, 0.1UF 25V 10% X7R 0603	L 3
C901	135505-1	CAP, 0.1UF 25V 10% X7R 0603	L 3
C902	135505-1	CAP, 0.1UF 25V 10% X7R 0603	J 3
C903	135505-1	CAP, 0.1UF 25V 10% X7R 0603	K 3
C904	135505-1	CAP, 0.1UF 25V 10% X7R 0603	H 4
C906	135505-1	CAP, 0.1UF 25V 10% X7R 0603	K 5
C907	135505-1	CAP, 0.1UF 25V 10% X7R 0603	K 4

C908	135505-1	CAP, 0.1UF 25V 10% X7R 0603	I 5
C909	135505-1	CAP, 0.1UF 25V 10% X7R 0603	I 5
C910	135505-1	CAP, 0.1UF 25V 10% X7R 0603	L 2
C911	135505-1	CAP, 0.1UF 25V 10% X7R 0603	L 3
C914	135505-1	CAP, 0.1UF 25V 10% X7R 0603	I 5
C915	135505-1	CAP, 0.1UF 25V 10% X7R 0603	I 5
C917	135505-1	CAP, 0.1UF 25V 10% X7R 0603	K 3
C918	135505-1	CAP, 0.1UF 25V 10% X7R 0603	K 3
C921	135505-1	CAP, 0.1UF 25V 10% X7R 0603	J 5
C922	135505-1	CAP, 0.1UF 25V 10% X7R 0603	H 5
C923	135505-1	CAP, 0.1UF 25V 10% X7R 0603	H 5
C924	135505-1	CAP, 0.1UF 25V 10% X7R 0603	H 5
C925	135505-1	CAP, 0.1UF 25V 10% X7R 0603	H 5
C926	135505-1	CAP, 0.1UF 25V 10% X7R 0603	J 2
C927	135505-1	CAP, 0.1UF 25V 10% X7R 0603	K 3
C928	A11427-103K1	0.01UF 50V 10% X7R MLC 0603	K 5
C931	135505-1	CAP, 0.1UF 25V 10% X7R 0603	J 1
C932	135505-1	CAP, 0.1UF 25V 10% X7R 0603	J 1
C934	135505-1	CAP, 0.1UF 25V 10% X7R 0603	I 4
C935	135505-1	CAP, 0.1UF 25V 10% X7R 0603	I 4
C936	A11427-103K1	0.01UF 50V 10% X7R MLC 0603	K 3
C937	135505-1	CAP, 0.1UF 25V 10% X7R 0603	J 2
C938	135505-1	CAP, 0.1UF 25V 10% X7R 0603	K 1
C939	135505-1	CAP, 0.1UF 25V 10% X7R 0603	J 1
C940	135505-1	CAP, 0.1UF 25V 10% X7R 0603	K 2
C941	135505-1	CAP, 0.1UF 25V 10% X7R 0603	J 2
C942	A11427-103K1	0.01UF 50V 10% X7R MLC 0603	I 2
C1000	A11427-104K2	.1UF 50V CHIP CAP 10% 0805 X7R	O 14
C1001	A11427-104K2	.1UF 50V CHIP CAP 10% 0805 X7R	O 14
C1002		OPEN	N 12
C1003		OPEN	N 12
C1004	133872-1	3900PF 5% 50V POLYESTER T/R	N 12
C1005	133873-1	8200PF 5% 50V POLYESTER T/R	N 12
C1006	A11369-100J2	CAP, 10PF 5% 50V SMT 0805	N 12
C1007	A11369-471J2	CAP, 470PF 5% 50V SMT 0805	N 12
C1008		OPEN	N 12
C1009		OPEN	N 12
C1010	A11369-101J2	100 PF 50V 5% NPO MLC 0805 T/R	M 12
C1011		OPEN	M 12
C1012		OPEN	O 9
C1013	133869-1	CAP, 150PF 5% 500V NPO RAD T/R	O 10
C1014		OPEN	K 9
C1015	133869-1	CAP, 150PF 5% 500V NPO RAD T/R	K 9
C1016	C10208-4	100.UF 25V 20% RAD ELECT T/R	N 9
C1017	A11427-104K2	.1UF 50V CHIP CAP 10% 0805 X7R	N 9
C1018	A10434-473JD	.047UF 250VDC 5% MET POLY T/A	M 10
C1019	A10434-473JD	.047UF 250VDC 5% MET POLY T/A	K 10
C1020	C10208-4	100.UF 25V 20% RAD ELECT T/R	L 9
C1021	A11427-104K2	.1UF 50V CHIP CAP 10% 0805 X7R	L 9
C1022	A11427-104K2	.1UF 50V CHIP CAP 10% 0805 X7R	N 14
C1023	A11427-104K2	.1UF 50V CHIP CAP 10% 0805 X7R	N 14

C1024		OPEN	J 12
C1025		OPEN	J 12
C1026	133872-1	3900PF 5% 50V POLYESTER T/R	J 12
C1027	133873-1	8200PF 5% 50V POLYESTER T/R	J 12
C1028	A11369-100J2	CAP, 10PF 5% 50V SMT 0805	I 12
C1029	A11369-471J2	CAP, 470PF 5% 50V SMT 0805	J 12
C1030		OPEN	J 12
C1031		OPEN	J 12
C1032	A11369-101J2	100 PF 50V 5% NPO MLC 0805 T/R	I 12
C1033		OPEN	I 12
C1034		OPEN	J 10
C1035	133869-1	CAP, 150PF 5% 500V NPO RAD T/R	I 9
C1036		OPEN	E 10
C1037	133869-1	CAP, 150PF 5% 500V NPO RAD T/R	E 10
C1038	C10208-4	100.UF 25V 20% RAD ELECT T/R	H 9
C1039	A11427-104K2	.1UF 50V CHIP CAP 10% 0805 X7R	H 9
C1040	A10434-473JD	.047UF 250VDC 5% MET POLY T/A	J 10
C1041	A10434-473JD	.047UF 250VDC 5% MET POLY T/A	H 10
C1042	C10208-4	100.UF 25V 20% RAD ELECT T/R	F 9
C1043	A11427-104K2	.1UF 50V CHIP CAP 10% 0805 X7R	F 9
C1044	A11427-104K2	.1UF 50V CHIP CAP 10% 0805 X7R	G 13
C1045	A11427-104K2	.1UF 50V CHIP CAP 10% 0805 X7R	G 12
C1047	103191-1	0.47UF 50V Z5U 1210 T/R	F 13
C1048	103418-103K2	.01MF 100V 10% X7R 0805 SMD	I 12
C1049	C 5362-6	2.2UF 50V VERT ELECT T/A	I 12
C1050	A11369-102J2	.001UF 50V 5% NPO MLC 0805 T/R	I 13
C1051		OPEN	H 13
C1052	103191-1	0.47UF 50V Z5U 1210 T/R	I 13
C1053	103191-1	0.47UF 50V Z5U 1210 T/R	H 13
C1054	103191-1	0.47UF 50V Z5U 1210 T/R	H 12
C1055		OPEN	O 14
C1056	C10208-4	100.UF 25V 20% RAD ELECT T/R	P 13
C1057	C10208-4	100.UF 25V 20% RAD ELECT T/R	O 13
C1058	C10208-4	100.UF 25V 20% RAD ELECT T/R	E 14
C1059	C10208-4	100.UF 25V 20% RAD ELECT T/R	E 14
C1060	A11427-104K2	.1UF 50V CHIP CAP 10% 0805 X7R	L 13
C1061	A11369-680J2	CAP, 68PF 5% 50V SMT 0805	L 12
C1062	A11369-680J2	CAP, 68PF 5% 50V SMT 0805	M 12
C1063	C10208-4	100.UF 25V 20% RAD ELECT T/R	N 13
C1064	C10208-4	100.UF 25V 20% RAD ELECT T/R	F 12
C1065	C10208-4	100.UF 25V 20% RAD ELECT T/R	F 12
C1066	131312-1	0.01UF 400V 5% MET POLY RAD	P 9
C1067	131312-1	0.01UF 400V 5% MET POLY RAD	P 9
C1068	131312-1	0.01UF 400V 5% MET POLY RAD	P 10
C1069	131312-1	0.01UF 400V 5% MET POLY RAD	O 9
C1070	131312-1	0.01UF 400V 5% MET POLY RAD	N 9
C1071	131312-1	0.01UF 400V 5% MET POLY RAD	N 9
C1072	131312-1	0.01UF 400V 5% MET POLY RAD	N 9
C1073	131312-1	0.01UF 400V 5% MET POLY RAD	N 9
C1074	125434-1	CAP,.068UF 400V FILM POLYESTER	M 10
C1075	125434-1	CAP,.068UF 400V FILM POLYESTER	K 10

C1076	125434-1	CAP,.068UF 400V FILM POLYESTER	N 10
C1077	125434-1	CAP,.068UF 400V FILM POLYESTER	O 10
C1078	125434-1	CAP,.068UF 400V FILM POLYESTER	O 10
C1079	125434-1	CAP,.068UF 400V FILM POLYESTER	P 10
C1080	131312-1	0.01UF 400V 5% MET POLY RAD	M 9
C1081	131312-1	0.01UF 400V 5% MET POLY RAD	M 9
C1082	131312-1	0.01UF 400V 5% MET POLY RAD	M 9
C1083	131312-1	0.01UF 400V 5% MET POLY RAD	M 9
C1084	131312-1	0.01UF 400V 5% MET POLY RAD	K 9
C1085	131312-1	0.01UF 400V 5% MET POLY RAD	K 9
C1086	131312-1	0.01UF 400V 5% MET POLY RAD	K 9
C1087	131312-1	0.01UF 400V 5% MET POLY RAD	J 9
C1088	131310-2	CAP,1200UF 200VDC PC MNT ELECT	O 11
C1089	131310-2	CAP,1200UF 200VDC PC MNT ELECT	P 12
C1090	131310-2	CAP,1200UF 200VDC PC MNT ELECT	O 12
C1091	131310-2	CAP,1200UF 200VDC PC MNT ELECT	N 11
C1092	131310-2	CAP,1200UF 200VDC PC MNT ELECT	M 11
C1093	131310-2	CAP,1200UF 200VDC PC MNT ELECT	N 12
C1094	131310-2	CAP,1200UF 200VDC PC MNT ELECT	M 12
C1095	131310-2	CAP,1200UF 200VDC PC MNT ELECT	L 11
C1096	131310-2	CAP,1200UF 200VDC PC MNT ELECT	K 11
C1097	131310-2	CAP,1200UF 200VDC PC MNT ELECT	K 12
C1098	131310-2	CAP,1200UF 200VDC PC MNT ELECT	J 11
C1099	131310-2	CAP,1200UF 200VDC PC MNT ELECT	J 12
C1100	131310-2	CAP,1200UF 200VDC PC MNT ELECT	I 12
C1101	131310-2	CAP,1200UF 200VDC PC MNT ELECT	I 11
C1102	131310-2	CAP,1200UF 200VDC PC MNT ELECT	H 11
C1103	131310-2	CAP,1200UF 200VDC PC MNT ELECT	H 12
C1104	131310-2	CAP,1200UF 200VDC PC MNT ELECT	G 12
C1105	131310-2	CAP,1200UF 200VDC PC MNT ELECT	G 11
C1106	131310-2	CAP,1200UF 200VDC PC MNT ELECT	F 11
C1107	131310-2	CAP,1200UF 200VDC PC MNT ELECT	F 12
C1108	131312-1	0.01UF 400V 5% MET POLY RAD	E 9
C1109	131312-1	0.01UF 400V 5% MET POLY RAD	E 9
C1110	131312-1	0.01UF 400V 5% MET POLY RAD	E 9
C1111	131312-1	0.01UF 400V 5% MET POLY RAD	E 9
C1112	131312-1	0.01UF 400V 5% MET POLY RAD	G 9
C1113	131312-1	0.01UF 400V 5% MET POLY RAD	G 9
C1114	131312-1	0.01UF 400V 5% MET POLY RAD	G 9
C1115	131312-1	0.01UF 400V 5% MET POLY RAD	G 9
C1116	125434-1	CAP,.068UF 400V FILM POLYESTER	E 10
C1117	125434-1	CAP,.068UF 400V FILM POLYESTER	F 10
C1118	125434-1	CAP,.068UF 400V FILM POLYESTER	J 10
C1119	125434-1	CAP,.068UF 400V FILM POLYESTER	H 10
C1120	125434-1	CAP,.068UF 400V FILM POLYESTER	F 10
C1121	125434-1	CAP,.068UF 400V FILM POLYESTER	F 10
C1122	131312-1	0.01UF 400V 5% MET POLY RAD	H 9
C1123	131312-1	0.01UF 400V 5% MET POLY RAD	H 9
C1124	131312-1	0.01UF 400V 5% MET POLY RAD	H 9
C1125	131312-1	0.01UF 400V 5% MET POLY RAD	H 9
C1126	131312-1	0.01UF 400V 5% MET POLY RAD	J 9

C1127	131312-1	0.01UF 400V 5% MET POLY RAD	J 9
C1128	131312-1	0.01UF 400V 5% MET POLY RAD	J 9
C1129	131312-1	0.01UF 400V 5% MET POLY RAD	J 9
C1130	A11427-104K2	.1UF 50V CHIP CAP 10% 0805 X7R	H 12
C1131	A11427-104K2	.1UF 50V CHIP CAP 10% 0805 X7R	H 13
C1132	A11427-104K2	.1UF 50V CHIP CAP 10% 0805 X7R	N 13
C1133	A11427-104K2	.1UF 50V CHIP CAP 10% 0805 X7R	N 14
C1134	A11427-104K2	.1UF 50V CHIP CAP 10% 0805 X7R	H 12
C1135	A11427-104K2	.1UF 50V CHIP CAP 10% 0805 X7R	H 13
C1136	A11427-104K2	.1UF 50V CHIP CAP 10% 0805 X7R	L 13
C1137	A11427-104J2	.1UF 50V 5% X7R 0805 T/R	E 13
C1138	A11427-104J2	.1UF 50V 5% X7R 0805 T/R	E 13
C1139	A11427-104J2	.1UF 50V 5% X7R 0805 T/R	E 13
C1140	A11427-104J2	.1UF 50V 5% X7R 0805 T/R	E 13
C1141		OPEN	E 13
C1142		OPEN	E 13
C1143		OPEN	E 13
C1144		OPEN	E 13
C1145		OPEN	E 12
C1146		OPEN	P 12
C1147	A11369-221J1	CAP, 220PF 50V 5% NPO 0603 T/R	L 12
C1300		OPEN	M 4
C1300X		OPEN	O 4
C1301		OPEN	N 4
C1301X		OPEN	O 4
C1302		OPEN	N 5
C1302X		OPEN	P 5
C1303		OPEN	N 4
C1303X		OPEN	P 4
C1304		OPEN	M 5
C1304X		OPEN	O 5
C1305		OPEN	M 4
C1305X		OPEN	O 4
C1306		OPEN	M 4
C1306X		OPEN	O 4
C1307		OPEN	M 1
C1307X		OPEN	O 1
C1308		OPEN	N 2
C1308X		OPEN	O 2
C1309		OPEN	N 2
C1309X		OPEN	P 2
C1310		OPEN	N 2
C1310X		OPEN	P 2
C1311		OPEN	M 2
C1311X		OPEN	O 2
C1312		OPEN	M 1
C1312X		OPEN	O 1
C1313		OPEN	M 1
C1313X		OPEN	O 1
C1314		OPEN	N 3
C1314X		OPEN	O 3

C1315		OPEN	M 2
C1315X		OPEN	O 2
C1316		OPEN	N 3
C1316X		OPEN	P 3
C1317		OPEN	N 3
C1317X		OPEN	P 3
C1318		OPEN	M 3
C1318X		OPEN	O 3
C1319		OPEN	N 3
C1319X		OPEN	O 3
D300	132558-1	DIODE, TL431ACD ADJ SMT REF	C 3
D301	133264-1	DIODE, 250V SWITCH MINIMELF	B 5
D302	132558-1	DIODE, TL431ACD ADJ SMT REF	E 3
D303	133264-1	DIODE, 250V SWITCH MINIMELF	D 3
D304	C 7478-8	1N4148 MINIMELF CHIP DIODE T/R	C 4
D305	C 7478-8	1N4148 MINIMELF CHIP DIODE T/R	E 4
D500	C10370-2	DIODE, ZENER 10V MMBZ5240BL	I 7
D500X	C10370-2	DIODE, ZENER 10V MMBZ5240BL	O 7
D501	125594-1	DIODE, RECTIFIER 400V 1A SMB	F 7
D501X	125594-1	DIODE, RECTIFIER 400V 1A SMB	L 7
D502	C 7478-8	1N4148 MINIMELF CHIP DIODE T/R	F 7
D502X	C 7478-8	1N4148 MINIMELF CHIP DIODE T/R	L 7
D503	C 7478-8	1N4148 MINIMELF CHIP DIODE T/R	E 7
D503X	C 7478-8	1N4148 MINIMELF CHIP DIODE T/R	K 7
D504	C 7478-8	1N4148 MINIMELF CHIP DIODE T/R	E 7
D504X	C 7478-8	1N4148 MINIMELF CHIP DIODE T/R	K 7
D505	C 7478-8	1N4148 MINIMELF CHIP DIODE T/R	E 7
D505X	C 7478-8	1N4148 MINIMELF CHIP DIODE T/R	K 7
D805	135343-1	DIODE, DUAL MMBD4148 SOT-23	I 5
D806	135343-1	DIODE, DUAL MMBD4148 SOT-23	I 5
D812	135343-1	DIODE, DUAL MMBD4148 SOT-23	H 5
D813	135343-1	DIODE, DUAL MMBD4148 SOT-23	H 5
D815	135343-1	DIODE, DUAL MMBD4148 SOT-23	J 5
D816	135343-1	DIODE, DUAL MMBD4148 SOT-23	J 5
D817	135343-1	DIODE, DUAL MMBD4148 SOT-23	I 3
D818	135343-1	DIODE, DUAL MMBD4148 SOT-23	I 3
D819	135343-1	DIODE, DUAL MMBD4148 SOT-23	I 3
D820	135343-1	DIODE, DUAL MMBD4148 SOT-23	H 3
D821	135343-1	DIODE, DUAL MMBD4148 SOT-23	I 3
D822	135343-1	DIODE, DUAL MMBD4148 SOT-23	L 2
D823	135343-1	DIODE, DUAL MMBD4148 SOT-23	I 2
D824	135343-1	DIODE, DUAL MMBD4148 SOT-23	H 4
D827	135343-1	DIODE, DUAL MMBD4148 SOT-23	L 4
D828	135343-1	DIODE, DUAL MMBD4148 SOT-23	L 5
D829	135343-1	DIODE, DUAL MMBD4148 SOT-23	I 2
D1000	C 7478-8	1N4148 MINIMELF CHIP DIODE T/R	N 13
D1001	C 7478-8	1N4148 MINIMELF CHIP DIODE T/R	N 13
D1002	C 7478-8	1N4148 MINIMELF CHIP DIODE T/R	K 13
D1003	C 7478-8	1N4148 MINIMELF CHIP DIODE T/R	K 13
D1004	134347-1	FORMED, 134346-1 PAIR (R3060)	O 9
D1005	134347-1	FORMED, 134346-1 PAIR (R3060)	L 9

D1006	C 7478-8	1N4148 MINIMELF CHIP DIODE T/R	O 9
D1007	133264-1	DIODE, 250V SWITCH MINIMELF	O 10
D1008	133264-1	DIODE, 250V SWITCH MINIMELF	O 10
D1009	133264-1	DIODE, 250V SWITCH MINIMELF	O 10
D1010	133264-1	DIODE, 250V SWITCH MINIMELF	O 10
D1011	137162-1	DIODE, 2EZ6.2D5 RAD FRM 6.2V	O 9
D1012	137162-1	DIODE, 2EZ6.2D5 RAD FRM 6.2V	O 9
D1013	C 7478-8	1N4148 MINIMELF CHIP DIODE T/R	L 9
D1014	133264-1	DIODE, 250V SWITCH MINIMELF	K 10
D1015	133264-1	DIODE, 250V SWITCH MINIMELF	L 10
D1016	133264-1	DIODE, 250V SWITCH MINIMELF	K 10
D1017	133264-1	DIODE, 250V SWITCH MINIMELF	L 10
D1018	137162-1	DIODE, 2EZ6.2D5 RAD FRM 6.2V	L 9
D1019	137162-1	DIODE, 2EZ6.2D5 RAD FRM 6.2V	L 9
D1020	134347-1	FORMED, 134346-1 PAIR (R3060)	I 9
D1021	134347-1	FORMED, 134346-1 PAIR (R3060)	F 9
D1022	C 7478-8	1N4148 MINIMELF CHIP DIODE T/R	I 9
D1023	133264-1	DIODE, 250V SWITCH MINIMELF	I 10
D1024	133264-1	DIODE, 250V SWITCH MINIMELF	I 10
D1025	133264-1	DIODE, 250V SWITCH MINIMELF	I 10
D1026	133264-1	DIODE, 250V SWITCH MINIMELF	I 10
D1027	137162-1	DIODE, 2EZ6.2D5 RAD FRM 6.2V	I 9
D1028	137162-1	DIODE, 2EZ6.2D5 RAD FRM 6.2V	I 9
D1029	C 7478-8	1N4148 MINIMELF CHIP DIODE T/R	F 9
D1030	133264-1	DIODE, 250V SWITCH MINIMELF	F 10
D1031	133264-1	DIODE, 250V SWITCH MINIMELF	F 10
D1032	133264-1	DIODE, 250V SWITCH MINIMELF	F 10
D1033	133264-1	DIODE, 250V SWITCH MINIMELF	F 10
D1034	137162-1	DIODE, 2EZ6.2D5 RAD FRM 6.2V	F 9
D1035	137162-1	DIODE, 2EZ6.2D5 RAD FRM 6.2V	F 9
D1036	C 7478-8	1N4148 MINIMELF CHIP DIODE T/R	G 13
D1037	C 7478-8	1N4148 MINIMELF CHIP DIODE T/R	N 13
D1038	C 7478-8	1N4148 MINIMELF CHIP DIODE T/R	I 12
D1039	C 9929-8	TL431ACLP ADJ PREC RFNC T/A	I 13
D1040	C 7478-8	1N4148 MINIMELF CHIP DIODE T/R	H 13
D1041		OPEN	G 13
D1042		OPEN	G 13
D1043		OPEN	G 13
D1044	A11371-0R02	0. OHM .125W 5% CHIP RES T/R	G 13
D1045	C 7478-8	1N4148 MINIMELF CHIP DIODE T/R	O 14
D1300		OPEN	N 5
D1300X		OPEN	P 5
D1301		OPEN	N 5
D1301X		OPEN	P 5
D1302		OPEN	M 4
D1302X		OPEN	O 4
D1303		OPEN	N 4
D1303X		OPEN	P 4
D1304		OPEN	N 4
D1304X		OPEN	P 4
D1305		OPEN	N 4

D1305X		OPEN	P 4
D1306		OPEN	N 2
D1306X		OPEN	P 2
D1307		OPEN	N 2
D1307X		OPEN	P 2
D1308		OPEN	M 2
D1308X		OPEN	O 2
D1309		OPEN	N 1
D1309X		OPEN	P 1
D1310		OPEN	N 1
D1310X		OPEN	P 1
D1311		OPEN	N 2
D1311X		OPEN	P 2
D1312		OPEN	M 3
D1312X		OPEN	O 3
D1313		OPEN	N 3
D1313X		OPEN	O 3
D1314		OPEN	N 3
D1314X		OPEN	O 3
D1315		OPEN	M 3
D1315X		OPEN	O 3
E800	126473-1	LED, GRN SMT 1206	I 3
FB260	125846-1	FERRITE BEAD, 600 OHM .5A 0805	D 14
FB261	125846-1	FERRITE BEAD, 600 OHM .5A 0805	D 14
FB262	125846-1	FERRITE BEAD, 600 OHM .5A 0805	B 14
FB263	125846-1	FERRITE BEAD, 600 OHM .5A 0805	A 14
FB800	125846-1	FERRITE BEAD, 600 OHM .5A 0805	H 3
FB804	125846-1	FERRITE BEAD, 600 OHM .5A 0805	K 2
FB805	125846-1	FERRITE BEAD, 600 OHM .5A 0805	K 2
FB806	125846-1	FERRITE BEAD, 600 OHM .5A 0805	L 4
FB807	125846-1	FERRITE BEAD, 600 OHM .5A 0805	L 5
FB808	125846-1	FERRITE BEAD, 600 OHM .5A 0805	L 4
FB809	125846-1	FERRITE BEAD, 600 OHM .5A 0805	L 5
FB1000	125846-1	FERRITE BEAD, 600 OHM .5A 0805	O 14
FB1001	125846-1	FERRITE BEAD, 600 OHM .5A 0805	O 14
FB1002	125846-1	FERRITE BEAD, 600 OHM .5A 0805	N 14
FB1003	125846-1	FERRITE BEAD, 600 OHM .5A 0805	N 14
FB1004	125846-1	FERRITE BEAD, 600 OHM .5A 0805	I 13
FB1005	125846-1	FERRITE BEAD, 600 OHM .5A 0805	I 13
H1		OPEN	F 13
HW1	A10019-16	6 X 32 PCB CAPTIVE NUT	M 14
HW2	133915-1	THREADED NUT W/FAST-ON	H 10
HW2X	137446-2	BRKT; NMS BCA OUTPUT	C 10
HW3	133915-1	THREADED NUT W/FAST-ON	I 10
HW4	133915-1	THREADED NUT W/FAST-ON	I 10
HW5	133915-1	THREADED NUT W/FAST-ON	J 10
HW6	133915-1	THREADED NUT W/FAST-ON	K 10
HW7	133915-1	THREADED NUT W/FAST-ON	L 10
HW8	133915-1	THREADED NUT W/FAST-ON	L 10
HW9	133915-1	THREADED NUT W/FAST-ON	M 10
HW10		OPEN	J 13

HW11		OPEN	L 13
HW12	137135-1	HEATSINK; NMS BCA BRIDGE	M 14
HW13	103415-10605	SCR, #6-32X.312 SEMS TFS CONE	N 14
HW14	103415-10605	SCR, #6-32X.312 SEMS TFS CONE	O 14
HW15	103415-10605	SCR, #6-32X.312 SEMS TFS CONE	M 14
HW16	133848-2	SILPAD, .715X2.70 W/ADHESIVE	O 14
HW17	133849-1	CLIP, HS TO-220 BRIDGE	O 14
HW18	136540-6	PWB, I-TECH PANEL 2	A 1
HW19	101016-1	LBL, BARCODE	J 14
HW20	101016-1	LBL, BARCODE	J 6*
HW21	101016-1	LBL, BARCODE	P 6*
HW22	101016-1	LBL, BARCODE	D 5
HW23	101016-1	LBL, BARCODE	L 2
HW24	101016-1	LBL, BARCODE	M 4
HW25	101016-1	LBL, BARCODE	O 4
HW26	101016-1	LBL, BARCODE	A 14
HW27	137208-1	.250 FASTON, FEMALE HANDINSERT	D 11
HW28	137208-1	.250 FASTON, FEMALE HANDINSERT	D 11
HW29	137208-1	.250 FASTON, FEMALE HANDINSERT	D 11
HW30	137208-1	.250 FASTON, FEMALE HANDINSERT	D 11
HW31	137208-1	.250 FASTON, FEMALE HANDINSERT	D 10
HW32	137208-1	.250 FASTON, FEMALE HANDINSERT	D 9
HW33	137208-1	.250 FASTON, FEMALE HANDINSERT	D 9
HW34	137208-1	.250 FASTON, FEMALE HANDINSERT	D 9
HW300	133807-1	WASHER, SOLDERABLE PC MNT 6X32	A 1
HW301	133807-1	WASHER, SOLDERABLE PC MNT 6X32	B 1
HW302	133807-1	WASHER, SOLDERABLE PC MNT 6X32	D 1
HW303	133807-1	WASHER, SOLDERABLE PC MNT 6X32	C 1
HW304	133807-1	WASHER, SOLDERABLE PC MNT 6X32	D 1
HW305	133807-1	WASHER, SOLDERABLE PC MNT 6X32	E 1
HW306	133807-1	WASHER, SOLDERABLE PC MNT 6X32	G 1
HW307	133807-1	WASHER, SOLDERABLE PC MNT 6X32	F 1
J2	136553-1	XLR, FEM HORZ PC METAL GND	E 15
J2A	136567-1	CBL, 20P 8" BOARD-IN-PICOFLEX	J 5
J2B	136566-1	CBL, 18P 8" BOARD-IN-PICOFLEX	J 4
J3	136553-1	XLR, FEM HORZ PC METAL GND	B 15
J11	136889-1	CONN, 6POS DUAL ROW 0.1"C-C TH	D 14
J300	131159-1	RECEP,32P VERT TOP & BOT ENTRY	B 5
J301	137204-1	CONN, SPKON CHROME NLT4MP	D 9
J302	137363-1	BDG POST, PC MOUNT RED/GOLD	C 10
J303	137361-1	BDG POST, PC MOUNT BLACK/GOLD	C 11
J304	137204-1	CONN, SPKON CHROME NLT4MP	D 11
J305	137361-1	BDG POST, PC MOUNT BLACK/GOLD	C 9
J306	137363-1	BDG POST, PC MOUNT RED/GOLD	C 11
J800	136627-1	HDR, LATCH/EJECT 24 PIN .1X.1	I 4
J1000	131314-1	RECEPT, 30P VERT 2ROW .1 CTR	N 13
J1001	131314-1	RECEPT, 30P VERT 2ROW .1 CTR	J 13
J1002	132551-1	RECEPT, 8PIN VERT .1 CTRS SMD	P 9
J1003	132551-1	RECEPT, 8PIN VERT .1 CTRS SMD	N 9
J1004	132551-1	RECEPT, 8PIN VERT .1 CTRS SMD	M 9
J1005	132551-1	RECEPT, 8PIN VERT .1 CTRS SMD	K 9

J1006	132551-1	RECEPT, 8PIN VERT .1 CTRS SMD	J 9
J1007	132551-1	RECEPT, 8PIN VERT .1 CTRS SMD	H 9
J1008	132551-1	RECEPT, 8PIN VERT .1 CTRS SMD	G 9
J1009	132551-1	RECEPT, 8PIN VERT .1 CTRS SMD	E 9
J1010	131159-1	RECEP,32P VERT TOP & BOT ENTRY	L 13*
J1011	130640-1	HEADER,3M LATCH 26 PIN .1X.1	F 13
J1012	131315-2	HDR, 6PIN MATE N LOK IN LINE	E 11
J1013	131317-1	HDR, LATCH/EJECT 50 PIN .1X.1	G 13
J1014	C 7873-0	2POS .1 CENTER MTA HEADER TIN	E 14
J1015	C 7873-0	2POS .1 CENTER MTA HEADER TIN	O 14
L300	133327-2	INDUCTOR, 2UH ADJUSTABLE	B 4
L300X		OPEN	B 4
L300Y		OPEN	B 4
L301	133326-2	INDUCTOR, 1UH ADJUSTABLE	B 4
L301X		OPEN	B 4
L301Y		OPEN	A 4
L302	131404-1	INDUCTOR, 1UH 30A AIRCORE	B 7
L303	133327-2	INDUCTOR, 2UH ADJUSTABLE	G 4
L303X		OPEN	G 4
L303Y		OPEN	G 4
L304	133326-2	INDUCTOR, 1UH ADJUSTABLE	F 4
L304X		OPEN	F 4
L304Y		OPEN	F 4
L305	131404-1	INDUCTOR, 1UH 30A AIRCORE	D 7
L1000	127988-1	CHOKE,10UH <0.1OHM SMT .3" DIA	O 9
L1001	127988-1	CHOKE,10UH <0.1OHM SMT .3" DIA	L 9
L1002	127988-1	CHOKE,10UH <0.1OHM SMT .3" DIA	I 9
L1003	127988-1	CHOKE,10UH <0.1OHM SMT .3" DIA	F 9
L1004	127988-1	CHOKE,10UH <0.1OHM SMT .3" DIA	F 13
L1005	127988-1	CHOKE,10UH <0.1OHM SMT .3" DIA	E 13
L1006	137450-1	INDUCTOR, 3.3UH 290ma SMD	L 12
L1007	137450-1	INDUCTOR, 3.3UH 290ma SMD	L 12
P2	136554-1	XLR, MALE HORZ PC METAL GND	D 15
P3	136554-1	XLR, MALE HORZ PC METAL GND	A 15
P300	137225-1	CABLE,16POS 3.3" SOLDERIN FLEX	B 8
P500	132533-1	HDR, 8PIN .1 CTR R/A SMD	J 6
P500X	132533-1	HDR, 8PIN .1 CTR R/A SMD	P 6
P501	132533-1	HDR, 8PIN .1 CTR R/A SMD	H 6
P501X	132533-1	HDR, 8PIN .1 CTR R/A SMD	N 6
P502	132533-1	HDR, 8PIN .1 CTR R/A SMD	G 6
P502X	132533-1	HDR, 8PIN .1 CTR R/A SMD	M 6
P503	132533-1	HDR, 8PIN .1 CTR R/A SMD	E 6
P503X	132533-1	HDR, 8PIN .1 CTR R/A SMD	K 6
P800	131764-1	CBL, 50PIN IDC HDR - IDC SKT	J 2
P804	131472-1	HDR, 10PIN DUAL ROW VERT SMT	H 3
P1300		OPEN	M 4
P1300X		OPEN	O 4
P1301		OPEN	M 2
P1301X		OPEN	O 2
P1302		OPEN	M 3
P1302X		OPEN	O 3

Q500	125798-1	TRANSISTOR,MMBT3906LTI PNP SMT	H 7
Q500X	125798-1	TRANSISTOR,MMBT3906LTI PNP SMT	N 7
Q501	125798-1	TRANSISTOR,MMBT3906LTI PNP SMT	H 7
Q501X	125798-1	TRANSISTOR,MMBT3906LTI PNP SMT	N 7
Q502	125798-1	TRANSISTOR,MMBT3906LTI PNP SMT	H 7
Q502X	125798-1	TRANSISTOR,MMBT3906LTI PNP SMT	N 7
Q503	125798-1	TRANSISTOR,MMBT3906LTI PNP SMT	H 7
Q503X	125798-1	TRANSISTOR,MMBT3906LTI PNP SMT	N 7
Q504	125798-1	TRANSISTOR,MMBT3906LTI PNP SMT	H 7
Q504X	125798-1	TRANSISTOR,MMBT3906LTI PNP SMT	N 7
Q505	125798-1	TRANSISTOR,MMBT3906LTI PNP SMT	I 7
Q505X	125798-1	TRANSISTOR,MMBT3906LTI PNP SMT	O 7
Q506	125798-1	TRANSISTOR,MMBT3906LTI PNP SMT	I 7
Q506X	125798-1	TRANSISTOR,MMBT3906LTI PNP SMT	O 7
Q507	132534-1	XSISTOR, PNP 30V LOW CAP SOT23	I 7
Q507X	132534-1	XSISTOR, PNP 30V LOW CAP SOT23	O 7
Q508	132534-1	XSISTOR, PNP 30V LOW CAP SOT23	I 7
Q508X	132534-1	XSISTOR, PNP 30V LOW CAP SOT23	O 7
Q509	C 7448-1	MMBT3904 CHIP NPN	I 7
Q509X	C 7448-1	MMBT3904 CHIP NPN	O 7
Q510	125798-1	TRANSISTOR,MMBT3906LTI PNP SMT	I 7
Q510X	125798-1	TRANSISTOR,MMBT3906LTI PNP SMT	O 7
Q511	131046-1	TRANSISTOR, KSC3265 NPN SOT-23	J 7
Q511X	131046-1	TRANSISTOR, KSC3265 NPN SOT-23	P 7
Q512	131047-1	TRANSISTOR, KSA1298 PNP SOT-23	J 7
Q512X	131047-1	TRANSISTOR, KSA1298 PNP SOT-23	P 7
Q513	131046-1	TRANSISTOR, KSC3265 NPN SOT-23	I 7
Q513X	131046-1	TRANSISTOR, KSC3265 NPN SOT-23	O 7
Q514	131047-1	TRANSISTOR, KSA1298 PNP SOT-23	I 7
Q514X	131047-1	TRANSISTOR, KSA1298 PNP SOT-23	O 7
Q515	131046-1	TRANSISTOR, KSC3265 NPN SOT-23	H 7
Q515X	131046-1	TRANSISTOR, KSC3265 NPN SOT-23	N 7
Q516	131047-1	TRANSISTOR, KSA1298 PNP SOT-23	H 7
Q516X	131047-1	TRANSISTOR, KSA1298 PNP SOT-23	N 7
Q517	131046-1	TRANSISTOR, KSC3265 NPN SOT-23	H 7
Q517X	131046-1	TRANSISTOR, KSC3265 NPN SOT-23	N 7
Q518	131047-1	TRANSISTOR, KSA1298 PNP SOT-23	H 7
Q518X	131047-1	TRANSISTOR, KSA1298 PNP SOT-23	N 7
Q519	125798-1	TRANSISTOR,MMBT3906LTI PNP SMT	G 7
Q519X	125798-1	TRANSISTOR,MMBT3906LTI PNP SMT	M 7
Q520	125798-1	TRANSISTOR,MMBT3906LTI PNP SMT	G 7
Q520X	125798-1	TRANSISTOR,MMBT3906LTI PNP SMT	M 7
Q521	125798-1	TRANSISTOR,MMBT3906LTI PNP SMT	G 8
Q521X	125798-1	TRANSISTOR,MMBT3906LTI PNP SMT	M 8
Q522	125798-1	TRANSISTOR,MMBT3906LTI PNP SMT	G 7
Q522X	125798-1	TRANSISTOR,MMBT3906LTI PNP SMT	M 7
Q523	125798-1	TRANSISTOR,MMBT3906LTI PNP SMT	F 8
Q523X	125798-1	TRANSISTOR,MMBT3906LTI PNP SMT	L 8
Q524	125798-1	TRANSISTOR,MMBT3906LTI PNP SMT	F 8
Q524X	125798-1	TRANSISTOR,MMBT3906LTI PNP SMT	L 8
Q525	125798-1	TRANSISTOR,MMBT3906LTI PNP SMT	E 8

Q525X	125798-1	TRANSISTOR,MMBT3906LTI PNP SMT	K 8
Q526	132534-1	XSISTOR, PNP 30V LOW CAP SOT23	F 7
Q526X	132534-1	XSISTOR, PNP 30V LOW CAP SOT23	L 7
Q527	132534-1	XSISTOR, PNP 30V LOW CAP SOT23	F 7
Q527X	132534-1	XSISTOR, PNP 30V LOW CAP SOT23	L 7
Q528	C 7448-1	MMBT3904 CHIP NPN	F 7
Q528X	C 7448-1	MMBT3904 CHIP NPN	L 7
Q529	125798-1	TRANSISTOR,MMBT3906LTI PNP SMT	F 7
Q529X	125798-1	TRANSISTOR,MMBT3906LTI PNP SMT	L 7
Q530	131046-1	TRANSISTOR, KSC3265 NPN SOT-23	G 7
Q530X	131046-1	TRANSISTOR, KSC3265 NPN SOT-23	M 7
Q531	131047-1	TRANSISTOR, KSA1298 PNP SOT-23	G 7
Q531X	131047-1	TRANSISTOR, KSA1298 PNP SOT-23	M 7
Q532	131046-1	TRANSISTOR, KSC3265 NPN SOT-23	F 7
Q532X	131046-1	TRANSISTOR, KSC3265 NPN SOT-23	L 7
Q533	131047-1	TRANSISTOR, KSA1298 PNP SOT-23	G 7
Q533X	131047-1	TRANSISTOR, KSA1298 PNP SOT-23	M 7
Q534	131046-1	TRANSISTOR, KSC3265 NPN SOT-23	E 7
Q534X	131046-1	TRANSISTOR, KSC3265 NPN SOT-23	K 7
Q535	131047-1	TRANSISTOR, KSA1298 PNP SOT-23	E 7
Q535X	131047-1	TRANSISTOR, KSA1298 PNP SOT-23	K 7
Q536	131046-1	TRANSISTOR, KSC3265 NPN SOT-23	E 7
Q536X	131046-1	TRANSISTOR, KSC3265 NPN SOT-23	K 7
Q537	131047-1	TRANSISTOR, KSA1298 PNP SOT-23	E 7
Q537X	131047-1	TRANSISTOR, KSA1298 PNP SOT-23	K 7
Q800	C 7448-1	MMBT3904 CHIP NPN	I 5
Q801	C 7448-1	MMBT3904 CHIP NPN	H 5
Q802	134833-1	FET, N-CH JFET 30V SOT-23	K 4
Q804	134833-1	FET, N-CH JFET 30V SOT-23	K 3
Q811	125798-1	TRANSISTOR,MMBT3906LTI PNP SMT	L 2
Q812	125798-1	TRANSISTOR,MMBT3906LTI PNP SMT	I 2
Q1000	131525-1	FORMED, 131250-1 FET (17N40)	P 9
Q1001	131525-1	FORMED, 131250-1 FET (17N40)	O 9
Q1002	131525-1	FORMED, 131250-1 FET (17N40)	N 9
Q1003	131525-1	FORMED, 131250-1 FET (17N40)	N 9
Q1004	131525-1	FORMED, 131250-1 FET (17N40)	M 9
Q1005	131525-1	FORMED, 131250-1 FET (17N40)	M 9
Q1006	131525-1	FORMED, 131250-1 FET (17N40)	K 9
Q1007	131525-1	FORMED, 131250-1 FET (17N40)	K 9
Q1008	131525-1	FORMED, 131250-1 FET (17N40)	J 9
Q1009	131525-1	FORMED, 131250-1 FET (17N40)	J 9
Q1010	131525-1	FORMED, 131250-1 FET (17N40)	H 9
Q1011	131525-1	FORMED, 131250-1 FET (17N40)	H 9
Q1012	131525-1	FORMED, 131250-1 FET (17N40)	G 9
Q1013	131525-1	FORMED, 131250-1 FET (17N40)	G 9
Q1014	131525-1	FORMED, 131250-1 FET (17N40)	E 9
Q1015	131525-1	FORMED, 131250-1 FET (17N40)	E 9
Q1016	102483-1	PNP 300V 500MA SOT-23	F 13
Q1017	C 7448-1	MMBT3904 CHIP NPN	H 13
Q1018	125798-1	TRANSISTOR,MMBT3906LTI PNP SMT	P 13
Q1019	C 7448-1	MMBT3904 CHIP NPN	P 14

Q1020	133282-1	TRANSISTOR, PNP 100V 3A TO220	P 14
Q1300		OPEN	N 4
Q1300X		OPEN	P 4
Q1301		OPEN	N 4
Q1301X		OPEN	P 4
Q1302		OPEN	N 1
Q1302X		OPEN	P 1
Q1303		OPEN	N 2
Q1303X		OPEN	P 2
Q1304		OPEN	N 2
Q1304X		OPEN	O 2
Q1305		OPEN	N 3
Q1305X		OPEN	O 3
R260	A11368-10001	100 OHM 1% 0805 RES T/R	C 15
R261	A11368-10001	100 OHM 1% 0805 RES T/R	C 15
R262	A11368-10001	100 OHM 1% 0805 RES T/R	C 15
R263	A11368-10001	100 OHM 1% 0805 RES T/R	C 14
R264	A11368-10001	100 OHM 1% 0805 RES T/R	C 14
R265	A11368-10001	100 OHM 1% 0805 RES T/R	C 15
R266	A11368-36521	36.5K OHM 0.1W 1% 0805 T/R	K 3
R267	A11368-10001	100 OHM 1% 0805 RES T/R	C 15
R268	A11368-10001	100 OHM 1% 0805 RES T/R	C 15
R269	A11368-10001	100 OHM 1% 0805 RES T/R	C 14
R270	A11368-10001	100 OHM 1% 0805 RES T/R	C 14
R300	A11368-30111	3.01K 1/10W 1% SMD 0805 T/R	C 3
R301	A11368-37411	3.74K OHM 1% 0.1W 0805 T/R	D 3
R302	A11368-82501	RES, 825 OHM 1% 0.1W 0805	D 3
R303	A11368-43211	4.32KOHM .1W 1% 0805 T/R	C 3
R304	A11368-10011	1.KOHM .1W 1% CHIP 0805	D 3
R305	A11368-10011	1.KOHM .1W 1% CHIP 0805	C 3
R306	A11368-10011	1.KOHM .1W 1% CHIP 0805	C 3
R307	A11368-10011	1.KOHM .1W 1% CHIP 0805	C 1
R308	A11368-10011	1.KOHM .1W 1% CHIP 0805	D 3
R309	C10443-7	.04 OHM 5W 3% WW RES AXL MOUNT	B 2
R310	C10443-7	.04 OHM 5W 3% WW RES AXL MOUNT	C 2
R311	C10443-7	.04 OHM 5W 3% WW RES AXL MOUNT	B 2
R312	C10443-7	.04 OHM 5W 3% WW RES AXL MOUNT	D 2
R313	C10443-7	.04 OHM 5W 3% WW RES AXL MOUNT	B 2
R314	C10443-7	.04 OHM 5W 3% WW RES AXL MOUNT	C 2
R315	132559-1	RES, 8.2 OHM 5% 2W RADIAL	B 4
R316	132559-1	RES, 8.2 OHM 5% 2W RADIAL	B 5
R317	132559-1	RES, 8.2 OHM 5% 2W RADIAL	B 5
R318	132560-1	RES, 220 OHM 5% 2W RADIAL	A 4
R319	132560-1	RES, 220 OHM 5% 2W RADIAL	A 4
R320	132560-1	RES, 220 OHM 5% 2W RADIAL	A 4
R321	132560-1	RES, 220 OHM 5% 2W RADIAL	A 4
R322	132560-1	RES, 220 OHM 5% 2W RADIAL	A 4
R323	132560-1	RES, 220 OHM 5% 2W RADIAL	A 4
R324	132560-1	RES, 220 OHM 5% 2W RADIAL	A 3
R325	132560-1	RES, 220 OHM 5% 2W RADIAL	A 3
R326	132560-1	RES, 220 OHM 5% 2W RADIAL	A 2

R327	132560-1	RES, 220 OHM 5% 2W RADIAL	A 2
R328	132560-1	RES, 220 OHM 5% 2W RADIAL	A 2
R329	132560-1	RES, 220 OHM 5% 2W RADIAL	A 3
R330	132560-1	RES, 220 OHM 5% 2W RADIAL	A 3
R331	132560-1	RES, 220 OHM 5% 2W RADIAL	A 3
R332	132561-1	RES, 91 OHM 5% 2W RADIAL	A 5
R333	132561-1	RES, 91 OHM 5% 2W RADIAL	A 5
R334	132561-1	RES, 91 OHM 5% 2W RADIAL	A 5
R335	132561-1	RES, 91 OHM 5% 2W RADIAL	A 6
R336	132561-1	RES, 91 OHM 5% 2W RADIAL	A 6
R337	132561-1	RES, 91 OHM 5% 2W RADIAL	A 6
R338	132561-1	RES, 91 OHM 5% 2W RADIAL	A 6
R339	132561-1	RES, 91 OHM 5% 2W RADIAL	A 6
R340	132561-1	RES, 91 OHM 5% 2W RADIAL	A 7
R341	A11368-30111	3.01K 1/10W 1% SMD 0805 T/R	E 3
R342	A11368-31611	3.16K 0.1W 1% 0805 T/R	E 3
R343	A11368-82501	RES, 825 OHM 1% 0.1W 0805	D 3
R344	A11368-43211	4.32KOHM .1W 1% 0805 T/R	E 3
R345	A11368-10011	1.KOHM .1W 1% CHIP 0805	E 3
R346	A11368-10011	1.KOHM .1W 1% CHIP 0805	F 3
R347	A11368-10011	1.KOHM .1W 1% CHIP 0805	E 3
R348	A11368-10011	1.KOHM .1W 1% CHIP 0805	D 3
R349	A11368-10011	1.KOHM .1W 1% CHIP 0805	F 1
R350	C10443-7	.04 OHM 5W 3% WW RES AXL MOUNT	E 2
R351	C10443-7	.04 OHM 5W 3% WW RES AXL MOUNT	F 2
R352	C10443-7	.04 OHM 5W 3% WW RES AXL MOUNT	D 2
R353	C10443-7	.04 OHM 5W 3% WW RES AXL MOUNT	G 2
R354	C10443-7	.04 OHM 5W 3% WW RES AXL MOUNT	E 2
R355	C10443-7	.04 OHM 5W 3% WW RES AXL MOUNT	F 2
R356	132559-1	RES, 8.2 OHM 5% 2W RADIAL	E 4
R357	132559-1	RES, 8.2 OHM 5% 2W RADIAL	E 4
R358	132559-1	RES, 8.2 OHM 5% 2W RADIAL	E 4
R359	132560-1	RES, 220 OHM 5% 2W RADIAL	G 4
R360	132560-1	RES, 220 OHM 5% 2W RADIAL	G 4
R361	132560-1	RES, 220 OHM 5% 2W RADIAL	G 4
R362	132560-1	RES, 220 OHM 5% 2W RADIAL	G 4
R363	132560-1	RES, 220 OHM 5% 2W RADIAL	G 4
R364	132560-1	RES, 220 OHM 5% 2W RADIAL	G 4
R365	132560-1	RES, 220 OHM 5% 2W RADIAL	G 3
R366	132560-1	RES, 220 OHM 5% 2W RADIAL	G 3
R367	132560-1	RES, 220 OHM 5% 2W RADIAL	G 3
R368	132560-1	RES, 220 OHM 5% 2W RADIAL	G 3
R369	132560-1	RES, 220 OHM 5% 2W RADIAL	G 3
R370	132560-1	RES, 220 OHM 5% 2W RADIAL	G 2
R371	132560-1	RES, 220 OHM 5% 2W RADIAL	G 2
R372	132560-1	RES, 220 OHM 5% 2W RADIAL	G 2
R373	132561-1	RES, 91 OHM 5% 2W RADIAL	E 4
R374	132561-1	RES, 91 OHM 5% 2W RADIAL	E 4
R375	132561-1	RES, 91 OHM 5% 2W RADIAL	E 4
R376	132561-1	RES, 91 OHM 5% 2W RADIAL	F 4
R377	132561-1	RES, 91 OHM 5% 2W RADIAL	F 4

R378	132561-1	RES, 91 OHM 5% 2W RADIAL	F 4
R379	132561-1	RES, 91 OHM 5% 2W RADIAL	F 4
R380	132561-1	RES, 91 OHM 5% 2W RADIAL	F 4
R381	132561-1	RES, 91 OHM 5% 2W RADIAL	G 4
R500	A11368-56201	562 OHM 0.1W 1% 0805 SMT	H 7
R500X	A11368-56201	562 OHM 0.1W 1% 0805 SMT	N 7
R501	A11368-56201	562 OHM 0.1W 1% 0805 SMT	G 7
R501X	A11368-56201	562 OHM 0.1W 1% 0805 SMT	M 7
R502	A11368-10021	10K 1/10W 1% SMD 0805 T/R	G 7
R502X	A11368-10021	10K 1/10W 1% SMD 0805 T/R	M 7
R503	A11368-10021	10K 1/10W 1% SMD 0805 T/R	H 8
R503X	A11368-10021	10K 1/10W 1% SMD 0805 T/R	N 8
R504	A11368-10021	10K 1/10W 1% SMD 0805 T/R	H 7
R504X	A11368-10021	10K 1/10W 1% SMD 0805 T/R	N 7
R505	A11368-10021	10K 1/10W 1% SMD 0805 T/R	H 8
R505X	A11368-10021	10K 1/10W 1% SMD 0805 T/R	N 8
R506	A11368-10021	10K 1/10W 1% SMD 0805 T/R	I 8
R506X	A11368-10021	10K 1/10W 1% SMD 0805 T/R	O 8
R507	A11368-10021	10K 1/10W 1% SMD 0805 T/R	I 8
R507X	A11368-10021	10K 1/10W 1% SMD 0805 T/R	O 8
R508	A11368-10021	10K 1/10W 1% SMD 0805 T/R	I 7
R508X	A11368-10021	10K 1/10W 1% SMD 0805 T/R	O 7
R509	A11368-90911	9.09 KOHM .1W 1% 0805 T/R	I 7
R509X	A11368-90911	9.09 KOHM .1W 1% 0805 T/R	O 7
R510	A11368-14311	1.43 KOHM 0.1W 1% 0805 SMT	I 7
R510X	A11368-14311	1.43 KOHM 0.1W 1% 0805 SMT	O 7
R511	A11371-5R11	5.1 OHM 0.1W 5% 0805 SMT	J 7
R511X	A11371-5R11	5.1 OHM 0.1W 5% 0805 SMT	P 7
R512	A11368-20001	200. OHM .1W 1% CHIP 0805	J 7
R512X	A11368-20001	200. OHM .1W 1% CHIP 0805	P 7
R513	A11371-5R11	5.1 OHM 0.1W 5% 0805 SMT	J 7
R513X	A11371-5R11	5.1 OHM 0.1W 5% 0805 SMT	P 7
R514	A11368-10R01	10 OHM .1W 1% 0805 T/R	J 7
R514X	A11368-10R01	10 OHM .1W 1% 0805 T/R	P 7
R515	A11371-5R11	5.1 OHM 0.1W 5% 0805 SMT	I 7
R515X	A11371-5R11	5.1 OHM 0.1W 5% 0805 SMT	O 7
R516	A11368-20001	200. OHM .1W 1% CHIP 0805	I 7
R516X	A11368-20001	200. OHM .1W 1% CHIP 0805	O 7
R517	A11371-5R11	5.1 OHM 0.1W 5% 0805 SMT	J 7
R517X	A11371-5R11	5.1 OHM 0.1W 5% 0805 SMT	P 7
R518	A11368-10R01	10 OHM .1W 1% 0805 T/R	J 7
R518X	A11368-10R01	10 OHM .1W 1% 0805 T/R	P 7
R519	A11371-5R11	5.1 OHM 0.1W 5% 0805 SMT	H 7
R519X	A11371-5R11	5.1 OHM 0.1W 5% 0805 SMT	N 7
R520	A11368-20001	200. OHM .1W 1% CHIP 0805	H 7
R520X	A11368-20001	200. OHM .1W 1% CHIP 0805	N 7
R521	A11371-5R11	5.1 OHM 0.1W 5% 0805 SMT	H 7
R521X	A11371-5R11	5.1 OHM 0.1W 5% 0805 SMT	N 7
R522	A11368-10R01	10 OHM .1W 1% 0805 T/R	H 7
R522X	A11368-10R01	10 OHM .1W 1% 0805 T/R	N 7
R523	A11371-5R11	5.1 OHM 0.1W 5% 0805 SMT	H 7

R523X	A11371-5R11	5.1 OHM 0.1W 5% 0805 SMT	N 7
R524	A11368-20001	200. OHM .1W 1% CHIP 0805	H 7
R524X	A11368-20001	200. OHM .1W 1% CHIP 0805	N 7
R525	A11371-5R11	5.1 OHM 0.1W 5% 0805 SMT	H 7
R525X	A11371-5R11	5.1 OHM 0.1W 5% 0805 SMT	N 7
R526	A11368-10R01	10 OHM .1W 1% 0805 T/R	H 7
R526X	A11368-10R01	10 OHM .1W 1% 0805 T/R	N 7
R527	A11368-56201	562 OHM 0.1W 1% 0805 SMT	G 7
R527X	A11368-56201	562 OHM 0.1W 1% 0805 SMT	M 7
R528	A11368-56201	562 OHM 0.1W 1% 0805 SMT	G 7
R528X	A11368-56201	562 OHM 0.1W 1% 0805 SMT	M 7
R529	A11368-10021	10K 1/10W 1% SMD 0805 T/R	G 7
R529X	A11368-10021	10K 1/10W 1% SMD 0805 T/R	M 7
R530	A11368-10021	10K 1/10W 1% SMD 0805 T/R	G 7
R530X	A11368-10021	10K 1/10W 1% SMD 0805 T/R	M 7
R531	A11368-10021	10K 1/10W 1% SMD 0805 T/R	G 7
R531X	A11368-10021	10K 1/10W 1% SMD 0805 T/R	M 7
R532	A11368-10021	10K 1/10W 1% SMD 0805 T/R	F 7
R532X	A11368-10021	10K 1/10W 1% SMD 0805 T/R	L 7
R533	A11368-10021	10K 1/10W 1% SMD 0805 T/R	F 7
R533X	A11368-10021	10K 1/10W 1% SMD 0805 T/R	L 7
R534	A11368-10021	10K 1/10W 1% SMD 0805 T/R	E 7
R534X	A11368-10021	10K 1/10W 1% SMD 0805 T/R	K 7
R535	A11368-10021	10K 1/10W 1% SMD 0805 T/R	F 7
R535X	A11368-10021	10K 1/10W 1% SMD 0805 T/R	L 7
R536	A11368-90911	9.09 KOHM .1W 1% 0805 T/R	F 7
R536X	A11368-90911	9.09 KOHM .1W 1% 0805 T/R	L 7
R537	A11368-14311	1.43 KOHM 0.1W 1% 0805 SMT	F 7
R537X	A11368-14311	1.43 KOHM 0.1W 1% 0805 SMT	L 7
R538	A11371-5R11	5.1 OHM 0.1W 5% 0805 SMT	G 7
R538X	A11371-5R11	5.1 OHM 0.1W 5% 0805 SMT	M 7
R539	A11368-20001	200. OHM .1W 1% CHIP 0805	G 7
R539X	A11368-20001	200. OHM .1W 1% CHIP 0805	M 7
R540	A11371-5R11	5.1 OHM 0.1W 5% 0805 SMT	G 7
R540X	A11371-5R11	5.1 OHM 0.1W 5% 0805 SMT	M 7
R541	A11368-10R01	10 OHM .1W 1% 0805 T/R	G 7
R541X	A11368-10R01	10 OHM .1W 1% 0805 T/R	M 7
R542	A11371-5R11	5.1 OHM 0.1W 5% 0805 SMT	G 7
R542X	A11371-5R11	5.1 OHM 0.1W 5% 0805 SMT	M 7
R543	A11368-20001	200. OHM .1W 1% CHIP 0805	F 7
R543X	A11368-20001	200. OHM .1W 1% CHIP 0805	L 7
R544	A11371-5R11	5.1 OHM 0.1W 5% 0805 SMT	G 7
R544X	A11371-5R11	5.1 OHM 0.1W 5% 0805 SMT	M 7
R545	A11368-10R01	10 OHM .1W 1% 0805 T/R	G 7
R545X	A11368-10R01	10 OHM .1W 1% 0805 T/R	M 7
R546	A11371-5R11	5.1 OHM 0.1W 5% 0805 SMT	E 7
R546X	A11371-5R11	5.1 OHM 0.1W 5% 0805 SMT	K 7
R547	A11368-20001	200. OHM .1W 1% CHIP 0805	E 7
R547X	A11368-20001	200. OHM .1W 1% CHIP 0805	K 7
R548	A11371-5R11	5.1 OHM 0.1W 5% 0805 SMT	E 7
R548X	A11371-5R11	5.1 OHM 0.1W 5% 0805 SMT	K 7

R549	A11368-10R01	10 OHM .1W 1% 0805 T/R	E 7
R549X	A11368-10R01	10 OHM .1W 1% 0805 T/R	K 7
R550	A11371-5R11	5.1 OHM 0.1W 5% 0805 SMT	E 7
R550X	A11371-5R11	5.1 OHM 0.1W 5% 0805 SMT	K 7
R551	A11368-20001	200. OHM .1W 1% CHIP 0805	E 7
R551X	A11368-20001	200. OHM .1W 1% CHIP 0805	K 7
R552	A11371-5R11	5.1 OHM 0.1W 5% 0805 SMT	E 7
R552X	A11371-5R11	5.1 OHM 0.1W 5% 0805 SMT	K 7
R553	A11368-10R01	10 OHM .1W 1% 0805 T/R	E 7
R553X	A11368-10R01	10 OHM .1W 1% 0805 T/R	K 7
R800	A11368-69821	RES, 69.8K 1% 0.1W SMT 0805	L 2
R801		OPEN	L 4
R802	A11368-69821	RES, 69.8K 1% 0.1W SMT 0805	K 2
R803		OPEN	J 4
R804	137362-1	10K 0.1% 0.1W 0805 THIN FILM	K 5
R805	137362-1	10K 0.1% 0.1W 0805 THIN FILM	K 4
R806	A11368-76811	7.68KOHM 0.10W 1% SMT 0805	K 5
R807	A11368-76811	7.68KOHM 0.10W 1% SMT 0805	K 4
R808	A11368-10020	RES, 10.0 KOHM 1/16W 1% 0603	I 1
R809	A11368-49910	RES, 4.99 KOHM 1/16W 1% 0603	I 1
R810	A11368-10020	RES, 10.0 KOHM 1/16W 1% 0603	I 1
R811	A11368-49910	RES, 4.99 KOHM 1/16W 1% 0603	I 1
R812	A11368-25501	255 OHM 1% 0.1W 0805 T/R	I 3
R813	A11368-10010	RES, 1.0 KOHM 1/16W 1% 0603	I 5
R814	A11368-10010	RES, 1.0 KOHM 1/16W 1% 0603	I 5
R815	A11368-10010	RES, 1.0 KOHM 1/16W 1% 0603	I 4
R816	A11368-10010	RES, 1.0 KOHM 1/16W 1% 0603	I 4
R817	A11368-10010	RES, 1.0 KOHM 1/16W 1% 0603	I 4
R818	A11368-33R20	RES, 33.2 OHM 1/16W 1% 0603	H 4
R819	A11368-10010	RES, 1.0 KOHM 1/16W 1% 0603	H 4
R820	A11368-33R20	RES, 33.2 OHM 1/16W 1% 0603	I 4
R821	A11368-10010	RES, 1.0 KOHM 1/16W 1% 0603	I 4
R822	A11368-33R20	RES, 33.2 OHM 1/16W 1% 0603	H 4
R823	A11368-10010	RES, 1.0 KOHM 1/16W 1% 0603	H 4
R824	A11368-33R20	RES, 33.2 OHM 1/16W 1% 0603	I 4
R825	A11368-10010	RES, 1.0 KOHM 1/16W 1% 0603	I 4
R826	A11368-33R20	RES, 33.2 OHM 1/16W 1% 0603	H 4
R827	A11368-10010	RES, 1.0 KOHM 1/16W 1% 0603	H 4
R828	A11368-10020	RES, 10.0 KOHM 1/16W 1% 0603	H 2
R829	A11368-33R20	RES, 33.2 OHM 1/16W 1% 0603	I 4
R830	A11368-10010	RES, 1.0 KOHM 1/16W 1% 0603	I 4
R831	A11368-75021	75K 1/10W 1% SMD 0805 T/R	K 3
R832	A11368-10030	RES, 100.0 KOHM 1/16W 1% 0603	K 3
R833	A11368-10020	RES, 10.0 KOHM 1/16W 1% 0603	K 4
R834	A11368-35721	35.7 KOHM 0.1W 1% 0805 T/R	K 4
R835	A11368-10040	RES, 1.00 MOHM 1/16W 1% 0603	K 3
R836	A11368-49931	499KOHM .1W 1% 0805 T/R	K 4
R837	A11371-0R01	RES, 0 OHM 0805 50 MILOHM MAX	K 4
R838	A11368-18231	182 KOHM 1% 0.10W 0805	L 3
R839	A11368-97601	976 OHM 1% 0.1W 0805 T/R	L 2
R840	A11368-15021	15.0K, 0.10W 1% MF 0805	L 3

R841	A11368-37411	3.74K OHM 1% 0.1W 0805 T/R	L 3
R842	A11368-18221	18.2KOHM 0.1W 1% CHIP 0805	L 3
R843	A11368-69811	6.98KOHM .1W 1% 0805 T/R	L 3
R844	A11368-36521	36.5K OHM 0.1W 1% 0805 T/R	L 3
R845	A11368-49911	4.99K 1/10W 1% SMD 0805 T/R	L 3
R846	A11368-40201	402 OHM 1% 0805 RES T/R	L 4
R847	A11368-49911	4.99K 1/10W 1% SMD 0805 T/R	L 3
R848	133871-1	TRIMPOT, 500 OHM TOP ADJ T/R	L 3
R849	A11368-22R11	22.1 OHM 0.1W 1% 0805 T/R	L 3
R850	A11368-20030	RES, 200 KOHM 1/16W 1% 0603	I 5
R851	A11368-10010	RES, 1.0 KOHM 1/16W 1% 0603	I 4
R852	A11368-20030	RES, 200 KOHM 1/16W 1% 0603	I 5
R853	A11368-20011	2.0K, 0.10W 1% MF 0805	I 5
R854	A11368-14021	14KOHM .1W 1% 0805 T/R	I 5
R855	A11368-10020	RES, 10.0 KOHM 1/16W 1% 0603	I 5
R856	A11368-10010	RES, 1.0 KOHM 1/16W 1% 0603	I 5
R857	A11368-30121	30.1K, 0.10W 1% MF 0805	I 5
R858	A11368-20030	RES, 200 KOHM 1/16W 1% 0603	I 5
R859	A11368-10040	RES, 1.00 MOHM 1/16W 1% 0603	I 6
R860	A11368-10010	RES, 1.0 KOHM 1/16W 1% 0603	I 5
R861	A11368-30121	30.1K, 0.10W 1% MF 0805	I 5
R862	A11368-30121	30.1K, 0.10W 1% MF 0805	I 5
R863	A11368-10030	RES, 100.0 KOHM 1/16W 1% 0603	I 5
R864	A11368-10011	1.KOHM .1W 1% CHIP 0805	I 5
R865	A11368-10020	RES, 10.0 KOHM 1/16W 1% 0603	I 5
R866	A11368-20030	RES, 200 KOHM 1/16W 1% 0603	I 5
R867	A11368-10020	RES, 10.0 KOHM 1/16W 1% 0603	I 5
R868	A11368-10030	RES, 100.0 KOHM 1/16W 1% 0603	I 5
R869	A11368-33R20	RES, 33.2 OHM 1/16W 1% 0603	H 4
R870	A11368-49931	499KOHM .1W 1% 0805 T/R	K 2
R871	A11371-0R00	RES, 0 OHM 0603 50 MILOHM MAX	L 2
R872	A11371-0R00	RES, 0 OHM 0603 50 MILOHM MAX	I 2
R874	A11368-10020	RES, 10.0 KOHM 1/16W 1% 0603	H 2
R875	A11368-49910	RES, 4.99 KOHM 1/16W 1% 0603	H 2
R876	A11368-10030	RES, 100.0 KOHM 1/16W 1% 0603	I 6
R877	A11368-49920	RES, 49.9 KOHM 1/16W 1% 0603	I 3
R878	A11368-10020	RES, 10.0 KOHM 1/16W 1% 0603	H 2
R879	A11368-10020	RES, 10.0 KOHM 1/16W 1% 0603	H 2
R880	A11368-49910	RES, 4.99 KOHM 1/16W 1% 0603	H 2
R881	137362-1	10K 0.1% 0.1W 0805 THIN FILM	K 5
R882	137362-1	10K 0.1% 0.1W 0805 THIN FILM	K 4
R883	A11368-76811	7.68KOHM 0.10W 1% SMT 0805	K 5
R884	A11368-76811	7.68KOHM 0.10W 1% SMT 0805	K 4
R885	A11368-10030	RES, 100.0 KOHM 1/16W 1% 0603	H 6
R886	A11368-49920	RES, 49.9 KOHM 1/16W 1% 0603	H 4
R887	A11368-10010	RES, 1.0 KOHM 1/16W 1% 0603	I 2
R904	A11368-75021	75K 1/10W 1% SMD 0805 T/R	K 2
R905	A11368-10030	RES, 100.0 KOHM 1/16W 1% 0603	K 3
R906	A11368-10020	RES, 10.0 KOHM 1/16W 1% 0603	K 3
R907	A11368-35721	35.7 KOHM 0.1W 1% 0805 T/R	K 3
R908	A11368-10040	RES, 1.00 MOHM 1/16W 1% 0603	K 2

R909	A11368-49931	499KOHM .1W 1% 0805 T/R	K 3
R910	A11368-49931	499KOHM .1W 1% 0805 T/R	K 3
R911	A11368-18231	182 KOHM 1% 0.10W 0805	K 3
R912	A11368-97601	976 OHM 1% 0.1W 0805 T/R	J 2
R913	A11368-15021	15.0K, 0.10W 1% MF 0805	J 3
R914	A11368-37411	3.74K OHM 1% 0.1W 0805 T/R	J 3
R915	A11368-18221	18.2KOHM 0.1W 1% CHIP 0805	J 3
R916	A11368-69811	6.98KOHM .1W 1% 0805 T/R	K 3
R917	A11368-49911	4.99K 1/10W 1% SMD 0805 T/R	J 3
R918	A11368-40201	402 OHM 1% 0805 RES T/R	J 4
R919	A11368-49911	4.99K 1/10W 1% SMD 0805 T/R	J 3
R920	133871-1	TRIMPOT, 500 OHM TOP ADJ T/R	J 3
R921	A11368-22R11	22.1 OHM 0.1W 1% 0805 T/R	J 3
R922	A11368-20030	RES, 200 KOHM 1/16W 1% 0603	H 5
R923	A11368-10010	RES, 1.0 KOHM 1/16W 1% 0603	H 4
R924	A11368-20030	RES, 200 KOHM 1/16W 1% 0603	H 4
R925	A11368-20011	2.0K, 0.10W 1% MF 0805	H 5
R926	A11368-14021	14KOHM .1W 1% 0805 T/R	H 5
R927	A11368-10020	RES, 10.0 KOHM 1/16W 1% 0603	H 5
R928	A11368-10010	RES, 1.0 KOHM 1/16W 1% 0603	H 5
R929	A11368-30121	30.1K, 0.10W 1% MF 0805	H 5
R930	A11368-10040	RES, 1.00 MOHM 1/16W 1% 0603	H 5
R931	A11368-20030	RES, 200 KOHM 1/16W 1% 0603	H 5
R932	A11368-10010	RES, 1.0 KOHM 1/16W 1% 0603	H 5
R933	A11368-30121	30.1K, 0.10W 1% MF 0805	H 5
R934	A11368-30121	30.1K, 0.10W 1% MF 0805	H 5
R935	A11368-10011	1.KOHM .1W 1% CHIP 0805	H 5
R936	A11368-10030	RES, 100.0 KOHM 1/16W 1% 0603	H 5
R937	A11368-10020	RES, 10.0 KOHM 1/16W 1% 0603	H 5
R938	A11368-20030	RES, 200 KOHM 1/16W 1% 0603	H 5
R939	A11368-10020	RES, 10.0 KOHM 1/16W 1% 0603	H 5
R940	A11368-10030	RES, 100.0 KOHM 1/16W 1% 0603	H 5
R950		OPEN	J 5
R951		OPEN	J 5
R952	A11368-10033	100.KOHM .25W 1% CHIP 1210	K 2
R953	A11368-10033	100.KOHM .25W 1% CHIP 1210	J 2
R956	A11368-10000	RES, 100 OHM 1/16W 1% 0603	J 5
R957	A11368-10010	RES, 1.0 KOHM 1/16W 1% 0603	J 5
R958	A11368-10010	RES, 1.0 KOHM 1/16W 1% 0603	J 5
R963	A11368-60410	6.04 KOHM 1/16W 1% 0603	J 4
R964	A11368-40210	RES, 4.02 KOHM 1/16W 1% 0603	J 4
R965	A11368-10R01	10 OHM .1W 1% 0805 T/R	J 4
R966	A11368-60410	6.04 KOHM 1/16W 1% 0603	I 4
R967	A11368-40210	RES, 4.02 KOHM 1/16W 1% 0603	I 4
R968	A11368-10R01	10 OHM .1W 1% 0805 T/R	J 4
R969	A11368-10000	RES, 100 OHM 1/16W 1% 0603	J 4
R970	A11368-10010	RES, 1.0 KOHM 1/16W 1% 0603	I 3
R971	A11368-24910	RES, 2.49 KOHM 1/16W 1% 0603	I 3
R972	A11368-10010	RES, 1.0 KOHM 1/16W 1% 0603	J 3
R973	A11368-24910	RES, 2.49 KOHM 1/16W 1% 0603	I 3
R974	A11368-10010	RES, 1.0 KOHM 1/16W 1% 0603	J 3

R975		OPEN	I 3
R976	A11368-10010	RES, 1.0 KOHM 1/16W 1% 0603	H 3
R977	A11368-16910	RES, 1.69 KOHM 1/16W 1% 0603	H 3
R978	A11368-10010	RES, 1.0 KOHM 1/16W 1% 0603	H 3
R979	A11368-16910	RES, 1.69 KOHM 1/16W 1% 0603	I 3
R980	A11368-10033	100.KOHM .25W 1% CHIP 1210	K 2
R981	A11368-13320	RES, 13.3K OHM 1/16W 1% 0603	K 2
R982	A11368-10033	100.KOHM .25W 1% CHIP 1210	I 2
R983	A11368-13320	RES, 13.3K OHM 1/16W 1% 0603	J 2
R984	A11368-10010	RES, 1.0 KOHM 1/16W 1% 0603	I 2
R985	A11368-10010	RES, 1.0 KOHM 1/16W 1% 0603	H 4
R986	A11368-10020	RES, 10.0 KOHM 1/16W 1% 0603	L 2
R987	A11368-10020	RES, 10.0 KOHM 1/16W 1% 0603	L 2
R988	A11368-10010	RES, 1.0 KOHM 1/16W 1% 0603	L 2
R989	A11368-10020	RES, 10.0 KOHM 1/16W 1% 0603	I 2
R990	A11368-10020	RES, 10.0 KOHM 1/16W 1% 0603	I 2
R991	A11368-10010	RES, 1.0 KOHM 1/16W 1% 0603	I 2
R992	A11368-43210	4.32 KOHM 1/16W 1% 0603	H 2
R993	A11368-10020	RES, 10.0 KOHM 1/16W 1% 0603	H 2
R994		OPEN	H 4
R996	A11368-10020	RES, 10.0 KOHM 1/16W 1% 0603	I 3
R1000	A11368-17821	17.8 KOHM 1% 0.1W 0805 T/R	M 12
R1001	A11368-68111	6.81K 0.10W 1% CHIP 0805	N 13
R1002	A11368-68111	6.81K 0.10W 1% CHIP 0805	N 12
R1003	A11368-10041	1M OHM .1W 1% CHIP 0805	O 12
R1004	A11368-10041	1M OHM .1W 1% CHIP 0805	O 13
R1005	A11368-10041	1M OHM .1W 1% CHIP 0805	O 12
R1006	C10447-8	100.KOHM TOP ADJ TRIMMER T/R	O 12
R1007	132095-1	NTC, 20K J 2% W/CONNECTOR	P 9
R1008	133932-1	RES, 47KOHM 5% 1W RADIAL	N 10
R1009	133932-1	RES, 47KOHM 5% 1W RADIAL	N 10
R1010	A11368-1R004	1 OHM 0.5W 1% 2010 T/R	O 10
R1011	A11368-1R004	1 OHM 0.5W 1% 2010 T/R	O 9
R1012	A11368-20022	20. KOHM .125W 1% CHIP RES T/R	N 10
R1013	A11368-20022	20. KOHM .125W 1% CHIP RES T/R	N 10
R1014	A11368-20022	20. KOHM .125W 1% CHIP RES T/R	N 10
R1015	A11368-20022	20. KOHM .125W 1% CHIP RES T/R	N 10
R1016	A11368-20022	20. KOHM .125W 1% CHIP RES T/R	N 10
R1017	A11368-20022	20. KOHM .125W 1% CHIP RES T/R	N 10
R1018	A11368-20022	20. KOHM .125W 1% CHIP RES T/R	M 10
R1019	A11368-20022	20. KOHM .125W 1% CHIP RES T/R	N 10
R1020	A11368-20022	20. KOHM .125W 1% CHIP RES T/R	M 10
R1021	A11368-20022	20. KOHM .125W 1% CHIP RES T/R	N 10
R1022	133932-1	RES, 47KOHM 5% 1W RADIAL	M 9
R1023	133932-1	RES, 47KOHM 5% 1W RADIAL	M 10
R1024	A11368-1R004	1 OHM 0.5W 1% 2010 T/R	L 9
R1025	A11368-1R004	1 OHM 0.5W 1% 2010 T/R	L 10
R1026	A11371-0R02	0. OHM .125W 5% CHIP RES T/R	L 14
R1027		OPEN	J 12
R1028	A11368-17821	17.8 KOHM 1% 0.1W 0805 T/R	I 12
R1029	A11368-68111	6.81K 0.10W 1% CHIP 0805	J 13

R1030	A11368-68111	6.81K 0.10W 1% CHIP 0805	J 12
R1031	A11368-10041	1M OHM .1W 1% CHIP 0805	K 12
R1032	A11368-10041	1M OHM .1W 1% CHIP 0805	K 13
R1033	A11368-10041	1M OHM .1W 1% CHIP 0805	K 12
R1034	C10447-8	100.KOHM TOP ADJ TRIMMER T/R	K 12
R1035	132095-1	NTC, 20K J 2% W/CONNECTOR	J 9
R1036	133932-1	RES, 47KOHM 5% 1W RADIAL	H 10
R1037	133932-1	RES, 47KOHM 5% 1W RADIAL	H 10
R1038	A11368-1R004	1 OHM 0.5W 1% 2010 T/R	I 10
R1039	A11368-1R004	1 OHM 0.5W 1% 2010 T/R	I 9
R1040	A11368-20022	20. KOHM .125W 1% CHIP RES T/R	G 10
R1041	A11368-20022	20. KOHM .125W 1% CHIP RES T/R	G 10
R1042	A11368-20022	20. KOHM .125W 1% CHIP RES T/R	G 10
R1043	A11368-20022	20. KOHM .125W 1% CHIP RES T/R	G 10
R1044	A11368-20022	20. KOHM .125W 1% CHIP RES T/R	G 10
R1045	A11368-20022	20. KOHM .125W 1% CHIP RES T/R	G 10
R1046	A11368-20022	20. KOHM .125W 1% CHIP RES T/R	G 10
R1047	A11368-20022	20. KOHM .125W 1% CHIP RES T/R	G 10
R1048	A11368-20022	20. KOHM .125W 1% CHIP RES T/R	G 10
R1049	A11368-20022	20. KOHM .125W 1% CHIP RES T/R	G 10
R1050	133932-1	RES, 47KOHM 5% 1W RADIAL	G 10
R1051	133932-1	RES, 47KOHM 5% 1W RADIAL	G 10
R1052	A11368-1R004	1 OHM 0.5W 1% 2010 T/R	F 10
R1053	A11368-1R004	1 OHM 0.5W 1% 2010 T/R	F 10
R1054	A11368-10021	10K 1/10W 1% SMD 0805 T/R	G 13
R1055	A11368-10021	10K 1/10W 1% SMD 0805 T/R	G 13
R1057	A11368-10021	10K 1/10W 1% SMD 0805 T/R	G 12
R1058	A11368-10021	10K 1/10W 1% SMD 0805 T/R	G 12
R1062	A11368-49911	4.99K 1/10W 1% SMD 0805 T/R	F 13
R1063	A11368-10021	10K 1/10W 1% SMD 0805 T/R	F 13
R1064	A11368-20021	20.KOHM .1W 1% CHIP 0805	G 13
R1065	A11368-10031	100.KOHM .1W 1% CHIP 0805	O 14
R1066	A11368-40212	4.02KOHM .125W 1% CHIP RES T/R	N 14
R1067	A11368-10011	1.KOHM .1W 1% CHIP 0805	I 12
R1068	A11368-69821	RES, 69.8K 1% 0.1W SMT 0805	I 12
R1069	A11368-10021	10K 1/10W 1% SMD 0805 T/R	I 12
R1070	A11368-49911	4.99K 1/10W 1% SMD 0805 T/R	I 13
R1071	A11368-10021	10K 1/10W 1% SMD 0805 T/R	H 13
R1072	A11368-10021	10K 1/10W 1% SMD 0805 T/R	H 13
R1073	A11368-10021	10K 1/10W 1% SMD 0805 T/R	I 13
R1074	A11368-20021	20.KOHM .1W 1% CHIP 0805	H 13
R1075	A11368-20031	200K 0.1W 1% SMD CHIP 0805	I 12
R1076	A11368-10021	10K 1/10W 1% SMD 0805 T/R	I 12
R1077	A11368-35721	35.7 KOHM 0.1W 1% 0805 T/R	I 13
R1078	A11368-10031	100.KOHM .1W 1% CHIP 0805	I 12
R1079	A11368-20031	200K 0.1W 1% SMD CHIP 0805	H 12
R1080	A11368-10031	100.KOHM .1W 1% CHIP 0805	I 12
R1081		OPEN	G 12
R1082	A11368-49911	4.99K 1/10W 1% SMD 0805 T/R	G 12
R1083	A11371-0R01	RES, 0 OHM 0805 50 MILOHM MAX	G 13
R1084	A11368-49911	4.99K 1/10W 1% SMD 0805 T/R	O 13

R1085	A11368-49911	4.99K 1/10W 1% SMD 0805 T/R	O 14
R1086		OPEN	G 13
R1087	A11368-51101	RES, 511 OHM 1% 0.1W 0805	O 14
R1088	A11368-80621	80.6 KOHM 0.1W 1% 0805	P 13
R1089	A11368-10021	10K 1/10W 1% SMD 0805 T/R	P 13
R1090	A11368-10021	10K 1/10W 1% SMD 0805 T/R	P 13
R1091	132556-1	RES, 0.68 OHM 5% 2W RADIAL	P 14
R1092	132556-1	RES, 0.68 OHM 5% 2W RADIAL	P 13
R1103	A11368-18202	182 OHM .125W 1% 1206 T/R	M 13
R1104	A11368-18202	182 OHM .125W 1% 1206 T/R	M 13
R1105	A11368-40R21	RES, 40.2 OHM 1% 0.1W SMT 0805	L 12
R1106		OPEN	L 12
R1107		OPEN	L 12
R1108	A11371-2202	22 OHM 1/8W 5% CHIP RES T/R	L 13
R1109		OPEN	L 13
R1110		OPEN	L 13
R1111		OPEN	L 12
R1112	A11368-20011	2.0K, 0.10W 1% MF 0805	L 12
R1113	A11368-10041	1M OHM .1W 1% CHIP 0805	M 12
R1114	A11368-15021	15.0K, 0.10W 1% MF 0805	O 13
R1115	A11368-10031	100.KOHM .1W 1% CHIP 0805	O 13
R1116	A11368-45321	45.3 KOHM .1W 1% 0805 T/R	O 13
R1117	A11368-78721	78.7KOHM 0.1W 1% 0805 T/R	N 13
R1118	A11368-10001	100 OHM 1% 0805 RES T/R	H 13
R1119	A11368-24911	2.49K 1/10W 1% SMD 0805 T/R	H 13
R1120	A11368-78721	78.7KOHM 0.1W 1% 0805 T/R	H 12
R1121	A11368-80621	80.6 KOHM 0.1W 1% 0805	H 12
R1122	A11368-24911	2.49K 1/10W 1% SMD 0805 T/R	H 12
R1123	A11368-80621	80.6 KOHM 0.1W 1% 0805	H 12
R1124	A11368-78721	78.7KOHM 0.1W 1% 0805 T/R	H 12
R1125	A11371-8235	82K OHM 5% 1W 2512 T/R	F 11
R1126	A11371-8235	82K OHM 5% 1W 2512 T/R	F 12
R1127	A11371-2202	22 OHM 1/8W 5% CHIP RES T/R	M 10
R1128	A11371-2202	22 OHM 1/8W 5% CHIP RES T/R	L 10
R1129	A11371-2202	22 OHM 1/8W 5% CHIP RES T/R	M 10
R1130	A11371-2202	22 OHM 1/8W 5% CHIP RES T/R	K 10
R1131	A11371-2202	22 OHM 1/8W 5% CHIP RES T/R	L 10
R1132	A11371-2202	22 OHM 1/8W 5% CHIP RES T/R	K 10
R1133	A11371-2202	22 OHM 1/8W 5% CHIP RES T/R	N 10
R1134	A11371-2202	22 OHM 1/8W 5% CHIP RES T/R	O 10
R1135	A11371-2202	22 OHM 1/8W 5% CHIP RES T/R	O 10
R1136	A11371-2202	22 OHM 1/8W 5% CHIP RES T/R	N 10
R1137	A11371-2202	22 OHM 1/8W 5% CHIP RES T/R	O 10
R1138	A11371-2202	22 OHM 1/8W 5% CHIP RES T/R	O 10
R1139	A11371-2202	22 OHM 1/8W 5% CHIP RES T/R	O 10
R1140	A11371-2202	22 OHM 1/8W 5% CHIP RES T/R	P 10
R1141	A11371-2202	22 OHM 1/8W 5% CHIP RES T/R	O 10
R1142	A11371-2202	22 OHM 1/8W 5% CHIP RES T/R	P 10
R1143	A11371-2202	22 OHM 1/8W 5% CHIP RES T/R	O 10
R1144	A11371-2202	22 OHM 1/8W 5% CHIP RES T/R	O 10
R1145	A11371-2202	22 OHM 1/8W 5% CHIP RES T/R	E 10

R1146	A11371-2202	22 OHM 1/8W 5% CHIP RES T/R	E 10
R1147	A11371-2202	22 OHM 1/8W 5% CHIP RES T/R	E 10
R1148	A11371-2202	22 OHM 1/8W 5% CHIP RES T/R	E 10
R1149	A11371-2202	22 OHM 1/8W 5% CHIP RES T/R	F 10
R1150	A11371-2202	22 OHM 1/8W 5% CHIP RES T/R	E 10
R1151	A11371-2202	22 OHM 1/8W 5% CHIP RES T/R	I 10
R1152	A11371-2202	22 OHM 1/8W 5% CHIP RES T/R	I 10
R1153	A11371-2202	22 OHM 1/8W 5% CHIP RES T/R	I 10
R1154	A11371-2202	22 OHM 1/8W 5% CHIP RES T/R	H 10
R1155	A11371-2202	22 OHM 1/8W 5% CHIP RES T/R	H 10
R1156	A11371-2202	22 OHM 1/8W 5% CHIP RES T/R	H 10
R1157	A11371-2202	22 OHM 1/8W 5% CHIP RES T/R	G 10
R1158	A11371-2202	22 OHM 1/8W 5% CHIP RES T/R	G 10
R1159	A11371-2202	22 OHM 1/8W 5% CHIP RES T/R	G 10
R1160	A11371-2202	22 OHM 1/8W 5% CHIP RES T/R	F 10
R1161	A11371-2202	22 OHM 1/8W 5% CHIP RES T/R	F 10
R1162	A11371-2202	22 OHM 1/8W 5% CHIP RES T/R	F 10
R1163	A11368-1R004	1 OHM 0.5W 1% 2010 T/R	E 12
R1164	A11368-1R004	1 OHM 0.5W 1% 2010 T/R	E 12
R1165	A11368-1R004	1 OHM 0.5W 1% 2010 T/R	P 12
R1166	A11368-1R004	1 OHM 0.5W 1% 2010 T/R	P 12
R1209	A11368-1R004	1 OHM 0.5W 1% 2010 T/R	J 5
R1210	A11368-10020	RES, 10.0 KOHM 1/16W 1% 0603	I 1
R1211	A11368-10020	RES, 10.0 KOHM 1/16W 1% 0603	I 1
R1212	A11368-10020	RES, 10.0 KOHM 1/16W 1% 0603	I 1
R1213	A11368-49910	RES, 4.99 KOHM 1/16W 1% 0603	I 1
R1214	A11368-10020	RES, 10.0 KOHM 1/16W 1% 0603	I 1
R1215	A11368-49910	RES, 4.99 KOHM 1/16W 1% 0603	I 1
R1216	A11368-10020	RES, 10.0 KOHM 1/16W 1% 0603	I 1
R1217	A11368-49910	RES, 4.99 KOHM 1/16W 1% 0603	I 1
R1218	A11368-10020	RES, 10.0 KOHM 1/16W 1% 0603	I 1
R1219	A11368-10020	RES, 10.0 KOHM 1/16W 1% 0603	I 1
R1220	A11368-10010	RES, 1.0 KOHM 1/16W 1% 0603	K 1
R1221	A11368-10010	RES, 1.0 KOHM 1/16W 1% 0603	J 1
R1222	A11368-40210	RES, 4.02 KOHM 1/16W 1% 0603	K 1
R1223	A11368-33210	RES, 3.32 KOHM 1/16W 1% 0603	J 1
R1224	A11368-10010	RES, 1.0 KOHM 1/16W 1% 0603	K 2
R1225	A11368-10010	RES, 1.0 KOHM 1/16W 1% 0603	K 2
R1226	A11368-75010	RES, 7.50 KOHM 1/16W 1% 0603	K 2
R1300		OPEN	N 5
R1300X		OPEN	P 5
R1301		OPEN	N 4
R1301X		OPEN	P 4
R1302		OPEN	N 4
R1302X		OPEN	P 4
R1303		OPEN	N 4
R1303X		OPEN	P 4
R1304		OPEN	N 4
R1304X		OPEN	P 4
R1305		OPEN	N 4
R1305X		OPEN	P 4

R1306		OPEN	N 4
R1306X		OPEN	P 4
R1307		OPEN	N 5
R1307X		OPEN	P 5
R1308		OPEN	N 2
R1308X		OPEN	P 2
R1309		OPEN	N 1
R1309X		OPEN	P 1
R1310		OPEN	N 1
R1310X		OPEN	P 1
R1311		OPEN	N 1
R1311X		OPEN	P 1
R1312		OPEN	N 1
R1312X		OPEN	P 1
R1313		OPEN	N 1
R1313X		OPEN	P 1
R1314		OPEN	N 2
R1314X		OPEN	P 2
R1315		OPEN	N 2
R1315X		OPEN	P 2
R1316		OPEN	M 3
R1316X		OPEN	O 3
R1317		OPEN	N 3
R1317X		OPEN	O 3
R1318		OPEN	M 3
R1318X		OPEN	O 3
R1319		OPEN	N 3
R1319X		OPEN	P 3
R1320		OPEN	N 3
R1320X		OPEN	P 3
R1321		OPEN	N 3
R1321X		OPEN	P 3
R1322		OPEN	M 3
R1322X		OPEN	O 3
R1323		OPEN	N 3
R1323X		OPEN	O 3
R1324		OPEN	M 3
R1324X		OPEN	O 3
S2		OPEN	C 15
T300		OPEN	D 4
T300X	136935-1	PS I SENSE XFMR, OUTPUT FILTER	D 4
T301	131233-1	XFMR,100:1 CURRSNSR LO PROFILE	B 6
T302	131233-1	XFMR,100:1 CURRSNSR LO PROFILE	D 6
T1300		OPEN	M 5
T1300X		OPEN	O 5
TC1		OPEN	K 15
TC2		OPEN	K 15*
TJ1000	137164-1	HEADER, 14PIN .1X.1 PIN8 VOID	I 13
TP300		OPEN	D 3
TP301	127064-1	TEST POINT, SMT 1206	C 3
TP302	127064-1	TEST POINT, SMT 1206	C 3

TP303	127064-1	TEST POINT, SMT 1206	A 1
TP304	127064-1	TEST POINT, SMT 1206	A 7
TP305		OPEN	E 3
TP306	127064-1	TEST POINT, SMT 1206	F 3
TP307	127064-1	TEST POINT, SMT 1206	E 3
TP308	127064-1	TEST POINT, SMT 1206	G 1
TP309	127064-1	TEST POINT, SMT 1206	A 8
TP310	127064-1	TEST POINT, SMT 1206	D 7
TP311	127064-1	TEST POINT, SMT 1206	G 4
TP500	127064-1	TEST POINT, SMT 1206	I 7
TP500X	127064-1	TEST POINT, SMT 1206	O 7
TP501	127064-1	TEST POINT, SMT 1206	I 7
TP501X	127064-1	TEST POINT, SMT 1206	O 7
TP502	127064-1	TEST POINT, SMT 1206	J 7
TP502X	127064-1	TEST POINT, SMT 1206	P 7
TP503	127064-1	TEST POINT, SMT 1206	I 7
TP503X	127064-1	TEST POINT, SMT 1206	O 7
TP504	127064-1	TEST POINT, SMT 1206	F 7
TP504X	127064-1	TEST POINT, SMT 1206	L 7
TP505	127064-1	TEST POINT, SMT 1206	E 7
TP505X	127064-1	TEST POINT, SMT 1206	K 7
TP506	127064-1	TEST POINT, SMT 1206	E 7
TP506X	127064-1	TEST POINT, SMT 1206	K 7
TP507	127064-1	TEST POINT, SMT 1206	E 7
TP507X	127064-1	TEST POINT, SMT 1206	K 7
TP800		OPEN	I 2
TP801	127064-1	TEST POINT, SMT 1206	K 5
TP802		OPEN	H 2
TP803	127064-1	TEST POINT, SMT 1206	L 3
TP804		OPEN	H 3
TP805		OPEN	H 2
TP806	127064-1	TEST POINT, SMT 1206	L 4
TP807		OPEN	H 2
TP808		OPEN	H 2
TP811	127064-1	TEST POINT, SMT 1206	L 3
TP812	127064-1	TEST POINT, SMT 1206	L 2
TP813		OPEN	H 3
TP814		OPEN	H 2
TP815	127064-1	TEST POINT, SMT 1206	K 2
TP816	127064-1	TEST POINT, SMT 1206	I 2
TP817	127064-1	TEST POINT, SMT 1206	H 4
TP818	127064-1	TEST POINT, SMT 1206	K 5
TP819	127064-1	TEST POINT, SMT 1206	I 4
TP820	127064-1	TEST POINT, SMT 1206	H 4
TP821	127064-1	TEST POINT, SMT 1206	I 4
TP824	127064-1	TEST POINT, SMT 1206	K 3
TP825	127064-1	TEST POINT, SMT 1206	K 3
TP826	127064-1	TEST POINT, SMT 1206	J 3
TP827	127064-1	TEST POINT, SMT 1206	I 3
TP828	127064-1	TEST POINT, SMT 1206	I 3
TP829	127064-1	TEST POINT, SMT 1206	I 3

TP830	127064-1	TEST POINT, SMT 1206	I 3
TP831	127064-1	TEST POINT, SMT 1206	H 3
TP832	127064-1	TEST POINT, SMT 1206	I 3
TP833	127064-1	TEST POINT, SMT 1206	J 2
TP842	127064-1	TEST POINT, SMT 1206	I 2
TP844	127064-1	TEST POINT, SMT 1206	J 4
TP845	127064-1	TEST POINT, SMT 1206	I 4
TP847	127064-1	TEST POINT, SMT 1206	K 4
TP848	127064-1	TEST POINT, SMT 1206	H 4
TP849	127064-1	TEST POINT, SMT 1206	I 2
TP853	127064-1	TEST POINT, SMT 1206	H 3
TP1000	127064-1	TEST POINT, SMT 1206	N 13
TP1001	127064-1	TEST POINT, SMT 1206	M 13
TP1002	127064-1	TEST POINT, SMT 1206	N 13
TP1003	127064-1	TEST POINT, SMT 1206	O 13
TP1004	127064-1	TEST POINT, SMT 1206	O 13
TP1006	127064-1	TEST POINT, SMT 1206	F 13
TP1008	127064-1	TEST POINT, SMT 1206	F 14
TP1010	127064-1	TEST POINT, SMT 1206	F 14
TP1011	127064-1	TEST POINT, SMT 1206	F 14
TP1013	127064-1	TEST POINT, SMT 1206	F 13
TP1014		OPEN	O 13
TP1015		OPEN	M 14
TP1016	127064-1	TEST POINT, SMT 1206	O 13
TP1017	127064-1	TEST POINT, SMT 1206	L 14
TP1018	127064-1	TEST POINT, SMT 1206	G 12
TP1019	127064-1	TEST POINT, SMT 1206	M 13
TP1300		OPEN	N 4
TP1300X		OPEN	P 4
TP1301		OPEN	N 4
TP1301X		OPEN	P 4
TP1302		OPEN	N 4
TP1302X		OPEN	P 4
TP1303		OPEN	N 4
TP1303X		OPEN	P 4
TP1304		OPEN	N 5
TP1304X		OPEN	P 5
TP1305		OPEN	N 4
TP1305X		OPEN	P 4
TP1306		OPEN	N 1
TP1306X		OPEN	P 1
TP1307		OPEN	N 2
TP1307X		OPEN	P 2
TP1308		OPEN	N 1
TP1308X		OPEN	P 1
TP1309		OPEN	N 1
TP1309X		OPEN	P 1
TP1310		OPEN	N 2
TP1310X		OPEN	P 2
TP1311		OPEN	N 2
TP1311X		OPEN	P 2

U300	C10494-0	HCPL2631 HI SPEED OPTOCOUPLER	D 3
U301	126559-1	COMPARATOR, LM393 SO-8 DUAL	D 3
U302	133890-1	REG, +5V D2PAK	D 4
U303	126559-1	COMPARATOR, LM393 SO-8 DUAL	E 3
U500	131048-1	DVR, IR2117S SMT MOS GATE S0-8	I 7
U500X	131048-1	DVR, IR2117S SMT MOS GATE S0-8	O 7
U501	131048-1	DVR, IR2117S SMT MOS GATE S0-8	F 7
U501X	131048-1	DVR, IR2117S SMT MOS GATE S0-8	L 7
U800	C 8262-5	MC33078D LOW NOISE DUAL OP AMP	K 4
U802	C 8262-5	MC33078D LOW NOISE DUAL OP AMP	L 3
U803	C 8262-5	MC33078D LOW NOISE DUAL OP AMP	J 3
U804	136936-1	IC, 74ACT244 TSSOP-20	H 4
U807	134835-1	OP AMP,OP07 LOW OFFSET SO8	K 3
U808	126559-1	COMPARATOR, LM393 SO-8 DUAL	K 3
U809	C 8262-5	MC33078D LOW NOISE DUAL OP AMP	L 2
U810	C 8262-5	MC33078D LOW NOISE DUAL OP AMP	I 5
U811	C 9038-8	COMPARATOR, QUAD LM339D SO-14	I 5
U814	134835-1	OP AMP,OP07 LOW OFFSET SO8	K 2
U815	C 8262-5	MC33078D LOW NOISE DUAL OP AMP	J 2
U816	C 8262-5	MC33078D LOW NOISE DUAL OP AMP	H 5
U817	C 9038-8	COMPARATOR, QUAD LM339D SO-14	H 5
U819	131262-1	CONV, A/D SERIAL 8CH 10BIT SMT	H 3
U821	131410-1	VOLT REG, 3.3V SOT-23 50MA	H 2
U822	136623-2	PLD, EPM3032ALC44-10 PROG	H 2
U823	C 8262-5	MC33078D LOW NOISE DUAL OP AMP	J 1
U825	C 8262-5	MC33078D LOW NOISE DUAL OP AMP	I 4
U826	102484-1	REG +15V D2PAK 2.25W	L 4
U827	102485-1	REG -15V D2PAK 2.25W	L 5
U828	126559-1	COMPARATOR, LM393 SO-8 DUAL	K 1
U1000	136953-1	LM2940CT-15-ND POS 15V REG	O 14
U1001	136961-1	LM2990T-15-ND NEG 15V REG	O 14
U1002	136953-1	LM2940CT-15-ND POS 15V REG	N 14
U1003	136961-1	LM2990T-15-ND NEG 15V REG	N 14
U1004	C 9012-3	OP AMP, QUAD LO NOISE MC33079D	H 13
U1005	C 9038-8	COMPARATOR, QUAD LM339D SO-14	N 14
U1006	C 9038-8	COMPARATOR, QUAD LM339D SO-14	H 12
U1007	126540-1	IC,QUAD 2 INPUT NOR GATE SO-14	L 13
U1008	C 9898-5	78L05ACM 5V 5%RES SO-8 SMT	L 13
U1009	125867-1	MC74HC4024D 7 STAGE COUNTER SM	L 13
U1300		OPEN	N 4
U1300X		OPEN	P 4
U1301		OPEN	M 5
U1301X		OPEN	O 5
U1302		OPEN	M 4
U1302X		OPEN	O 4
U1303		OPEN	M 4
U1303X		OPEN	O 4
U1304		OPEN	N 2
U1304X		OPEN	P 2
U1305		OPEN	M 2
U1305X		OPEN	O 2

U1306		OPEN	M 2
U1306X		OPEN	O 2
U1307		OPEN	M 1
U1307X		OPEN	O 1
W1A	137077-1	WIRE, 4.8" 12GA WHT NMS OUTPUT	B 8
W1B		OPEN	B 10
W2A	137078-1	WIRE, 4.8" 12GA BLK NMS OUTPUT	B 8
W2B		OPEN	B 10
W3A	137079-1	WIRE, 6.4" 12GA BLK NMS OUTPUT	D 7
W3B		OPEN	B 11
W4A	137080-1	WIRE, 6.4" 12GA WHT NMS OUTPUT	D 8
W4B		OPEN	C 10
Y1000	131114-1	CRYSTAL, 4MHZ SMD	M 12

IT4000 Panel 3 137101-8

REF. DES.	CPN	DESCRIPTION	MAP LOC.
C1	137030-1	CAP, 1UF X2 REDUCED SIZE	A 3
C2	137030-1	CAP, 1UF X2 REDUCED SIZE	B 1
C3	137030-1	CAP, 1UF X2 REDUCED SIZE	B 4
C4	137030-1	CAP, 1UF X2 REDUCED SIZE	A 2
C5	137030-1	CAP, 1UF X2 REDUCED SIZE	F 2
C6	137030-1	CAP, 1UF X2 REDUCED SIZE	G 1
C7	137030-1	CAP, 1UF X2 REDUCED SIZE	C 2
C8	137030-1	CAP, 1UF X2 REDUCED SIZE	D 1
C9	137030-1	CAP, 1UF X2 REDUCED SIZE	C 3
C10	137030-1	CAP, 1UF X2 REDUCED SIZE	D 4
C11	137455-1	4700 PF 275VAC 10% FILM Y2	C 4
C12	137455-1	4700 PF 275VAC 10% FILM Y2	C 1
C13	137455-1	4700 PF 275VAC 10% FILM Y2	F 4
C14	137455-1	4700 PF 275VAC 10% FILM Y2	F 1
C15	137030-1	CAP, 1UF X2 REDUCED SIZE	F 3
C18	136819-1	CAP, 100UF 400V HIGH RIPPLE	C 5
C19	A11369-332J5	CAP, 3300PF 5% 50V SMT 1206	D 5
C20	137030-1	CAP, 1UF X2 REDUCED SIZE	G 4
C21	131787-1	CAP, 0.068UF 50V 5% METAL FILM	D 5
C22	A11369-122J2	0.0012UF 50V 5% NPO MLC 0805	D 5
C23	137451-1	CAP,.047UF 630V POLYPROPYLENE	D 5
C24	132042-1	CAP, 100UF 35V ALUM ELECT SMT	C 5
C25	A11427-104K2	.1UF 50V CHIP CAP 10% 0805 X7R	C 5
C26	137451-1	CAP,.047UF 630V POLYPROPYLENE	D 5
C27	A11427-104K2	.1UF 50V CHIP CAP 10% 0805 X7R	F 5
C28	A11427-104K2	.1UF 50V CHIP CAP 10% 0805 X7R	F 5
C29	125714-1	330UF 35V 20% ALUM ELEC SMT TR	F 6
C30	125714-1	330UF 35V 20% ALUM ELEC SMT TR	F 5
C31	137455-1	4700 PF 275VAC 10% FILM Y2	F 5
C32	137455-1	4700 PF 275VAC 10% FILM Y2	E 5
C33	A11427-104K2	.1UF 50V CHIP CAP 10% 0805 X7R	F 4
C34	137455-1	4700 PF 275VAC 10% FILM Y2	E 4
C35	137455-1	4700 PF 275VAC 10% FILM Y2	I 3
C36	137455-1	4700 PF 275VAC 10% FILM Y2	I 2
C38	136727-1	CAP, 0.33UF 1000V POLYPROP	M 8
C39	136727-1	CAP, 0.33UF 1000V POLYPROP	L 8
C40	136727-1	CAP, 0.33UF 1000V POLYPROP	L 8
C41		OPEN	K 8
C42	136727-1	CAP, 0.33UF 1000V POLYPROP	K 7
C43	136727-1	CAP, 0.33UF 1000V POLYPROP	L 7
C44		OPEN	J 7
C45	136727-1	CAP, 0.33UF 1000V POLYPROP	L 7
C46	131312-1	0.01UF 400V 5% MET POLY RAD	K 9
C47	131312-1	0.01UF 400V 5% MET POLY RAD	K 8
C54	137223-1	CAP, 4700UF 25V ELEC 16MM DIA	I 10
C55	A11427-104K2	.1UF 50V CHIP CAP 10% 0805 X7R	I 10
C56	137217-1	CAP, 2200UF 25V ELEC	H 10
C57	A11427-104K2	.1UF 50V CHIP CAP 10% 0805 X7R	I 9

C58	136726-2	CAP,1200UF 220VDC PC MNT ELECT	I 11
C59	A10434-104JD	.1UF 250V 5% MTL POLY FILM T/A	H 10
C61	136726-2	CAP,1200UF 220VDC PC MNT ELECT	H 11
C62	A10434-104JD	.1UF 250V 5% MTL POLY FILM T/A	H 10
C64	C10326-4	CAP, .1UF 250VAC 20% FILM X2	G 8
C65	C10326-4	CAP, .1UF 250VAC 20% FILM X2	G 7
C66	C10326-4	CAP, .1UF 250VAC 20% FILM X2	H 7
C67	C10326-4	CAP, .1UF 250VAC 20% FILM X2	I 7
C68	136735-1	CAP, 3.3UF 630VDC POLYPROP	B 7
C69	136735-1	CAP, 3.3UF 630VDC POLYPROP	D 7
C70	136735-1	CAP, 3.3UF 630VDC POLYPROP	F 7
C72	137451-1	CAP,.047UF 630V POLYPROPYLENE	C 8
C73	A11369-102J2	.001UF 50V 5% NPO MLC 0805 T/R	A 11
C79	136727-1	CAP, 0.33UF 1000V POLYPROP	N 8
C80	136727-1	CAP, 0.33UF 1000V POLYPROP	M 7
C81	137451-1	CAP,.047UF 630V POLYPROPYLENE	D 7
C84	137451-1	CAP,.047UF 630V POLYPROPYLENE	D 11
C87	137451-1	CAP,.047UF 630V POLYPROPYLENE	C 11
C101	A11369-102J2	.001UF 50V 5% NPO MLC 0805 T/R	J 5
C102	A11369-102J2	.001UF 50V 5% NPO MLC 0805 T/R	J 5
C103	A11369-102J2	.001UF 50V 5% NPO MLC 0805 T/R	J 5
C104	A11369-102J2	.001UF 50V 5% NPO MLC 0805 T/R	J 5
C105	A11369-102J2	.001UF 50V 5% NPO MLC 0805 T/R	J 6
C106	A11369-102J2	.001UF 50V 5% NPO MLC 0805 T/R	H 6
C107	A11369-102F2	1000PF 50V 1% CHIP CAP	H 5
C109	135505-1	CAP, 0.1UF 25V 10% X7R 0603	G 5
C110	135505-1	CAP, 0.1UF 25V 10% X7R 0603	G 5
C111	135505-1	CAP, 0.1UF 25V 10% X7R 0603	G 5
C112	A11369-102J2	.001UF 50V 5% NPO MLC 0805 T/R	K 5
C113	A11369-103K2	.01MF 50V 10% CHIP NPO MLC	K 5
C114	A11369-102J2	.001UF 50V 5% NPO MLC 0805 T/R	K 5
C115	A11369-103K2	.01MF 50V 10% CHIP NPO MLC	L 5
C116	A11369-102J2	.001UF 50V 5% NPO MLC 0805 T/R	L 5
C117	A11369-102J2	.001UF 50V 5% NPO MLC 0805 T/R	L 5
C118	A11369-102J2	.001UF 50V 5% NPO MLC 0805 T/R	L 6
C119	126539-1	10UF 16V 5.5MM HIGH SMD	L 6
C120	A11369-102J2	.001UF 50V 5% NPO MLC 0805 T/R	L 5
C121	A11369-103K2	.01MF 50V 10% CHIP NPO MLC	I 5
C122	135505-1	CAP, 0.1UF 25V 10% X7R 0603	K 5
C123	A11369-102J2	.001UF 50V 5% NPO MLC 0805 T/R	K 5
C124	A11369-102J2	.001UF 50V 5% NPO MLC 0805 T/R	I 5
C125	A11369-100J2	CAP, 10PF 5% 50V SMT 0805	M 5
C126	135505-1	CAP, 0.1UF 25V 10% X7R 0603	L 4
C127	135505-1	CAP, 0.1UF 25V 10% X7R 0603	L 5
C128	103418-103J2	.01UF 5% 100V X7R 0805	M 5
C129		OPEN	H 5
C130	135505-1	CAP, 0.1UF 25V 10% X7R 0603	K 5
C131	126542-1	2.2UF 50V 5.5MM HIGH SMD	H 6
C132	135505-1	CAP, 0.1UF 25V 10% X7R 0603	H 6
C133	126539-1	10UF 16V 5.5MM HIGH SMD	H 6
C134	126542-1	2.2UF 50V 5.5MM HIGH SMD	M 5

C135	135505-1	CAP, 0.1UF 25V 10% X7R 0603	M 4
C136	132042-1	CAP, 100UF 35V ALUM ELECT SMT	N 5
C137	126542-1	2.2UF 50V 5.5MM HIGH SMD	N 5
C138	135505-1	CAP, 0.1UF 25V 10% X7R 0603	M 6
C139	132042-1	CAP, 100UF 35V ALUM ELECT SMT	M 5
C142	A11369-470K1	CAP, 47PF 50V 10% NPO 0603 T/R	J 5
C143	A11369-470K1	CAP, 47PF 50V 10% NPO 0603 T/R	J 5
C144	135505-1	CAP, 0.1UF 25V 10% X7R 0603	J 5
C145	135505-1	CAP, 0.1UF 25V 10% X7R 0603	J 6
C146	135505-1	CAP, 0.1UF 25V 10% X7R 0603	J 5
C147	135505-1	CAP, 0.1UF 25V 10% X7R 0603	I 6
C148	135505-1	CAP, 0.1UF 25V 10% X7R 0603	I 6
C149	135505-1	CAP, 0.1UF 25V 10% X7R 0603	K 5
C150	135505-1	CAP, 0.1UF 25V 10% X7R 0603	L 5
C151	135505-1	CAP, 0.1UF 25V 10% X7R 0603	L 6
C152	135505-1	CAP, 0.1UF 25V 10% X7R 0603	H 5
C153	135505-1	CAP, 0.1UF 25V 10% X7R 0603	H 5
C154	A11369-103K2	.01MF 50V 10% CHIP NPO MLC	M 5
C155	A11369-103K2	.01MF 50V 10% CHIP NPO MLC	L 5
C156	135505-1	CAP, 0.1UF 25V 10% X7R 0603	K 5
C157	A11427-104K2	.1UF 50V CHIP CAP 10% 0805 X7R	L 5
C158	A11369-102J2	.001UF 50V 5% NPO MLC 0805 T/R	I 5
C162	A11369-102J2	.001UF 50V 5% NPO MLC 0805 T/R	K 5
C163	135505-1	CAP, 0.1UF 25V 10% X7R 0603	K 6
C164	A11369-103K2	.01MF 50V 10% CHIP NPO MLC	K 5
C165	A11369-330J1	CAP, 33PF 50V NPO 5% 0603	I 4
C167	A11369-101J2	100 PF 50V 5% NPO MLC 0805 T/R	G 5
C168	A11369-102J2	.001UF 50V 5% NPO MLC 0805 T/R	I 5
C169	A11369-102J2	.001UF 50V 5% NPO MLC 0805 T/R	I 5
C170	135505-1	CAP, 0.1UF 25V 10% X7R 0603	H 5
C171	128113-1	CAP, 0.1UF 16V FILM 1210 SMD	I 5
C172	A11369-100J2	CAP, 10PF 5% 50V SMT 0805	K 6
C173	A11369-102J2	.001UF 50V 5% NPO MLC 0805 T/R	I 5
C174	135505-1	CAP, 0.1UF 25V 10% X7R 0603	I 6
C175	A11369-100J2	CAP, 10PF 5% 50V SMT 0805	J 5
C176	A11369-100J2	CAP, 10PF 5% 50V SMT 0805	J 6
C177	A11369-221J1	CAP, 220PF 50V 5% NPO 0603 T/R	J 6
C178	A11369-221J1	CAP, 220PF 50V 5% NPO 0603 T/R	I 5
C179	A11369-102J2	.001UF 50V 5% NPO MLC 0805 T/R	I 5
C180	135505-1	CAP, 0.1UF 25V 10% X7R 0603	K 5
C181	A11369-103K2	.01MF 50V 10% CHIP NPO MLC	K 5
C182	A11369-100J2	CAP, 10PF 5% 50V SMT 0805	L 5
C183	A11369-100J2	CAP, 10PF 5% 50V SMT 0805	L 6
C184	135505-1	CAP, 0.1UF 25V 10% X7R 0603	K 5
C185	A11369-102J2	.001UF 50V 5% NPO MLC 0805 T/R	K 5
C186	135505-1	CAP, 0.1UF 25V 10% X7R 0603	K 5
C187	135505-1	CAP, 0.1UF 25V 10% X7R 0603	K 6
C188	135505-1	CAP, 0.1UF 25V 10% X7R 0603	I 5
C189	135505-1	CAP, 0.1UF 25V 10% X7R 0603	I 5
C190	135505-1	CAP, 0.1UF 25V 10% X7R 0603	K 6
C191	135505-1	CAP, 0.1UF 25V 10% X7R 0603	H 5

C192	138196-1	CAP, 10UF X7R 10% 25V 1210 T/R	M 5
C194	135505-1	CAP, 0.1UF 25V 10% X7R 0603	J 5
C195	135505-1	CAP, 0.1UF 25V 10% X7R 0603	L 5
C196	135505-1	CAP, 0.1UF 25V 10% X7R 0603	M 5
C197	135505-1	CAP, 0.1UF 25V 10% X7R 0603	L 4
C198	135505-1	CAP, 0.1UF 25V 10% X7R 0603	L 4
C199	135505-1	CAP, 0.1UF 25V 10% X7R 0603	L 4
C1300	A11427-104K2	.1UF 50V CHIP CAP 10% 0805 X7R	O 4
C1300X	A11427-104K2	.1UF 50V CHIP CAP 10% 0805 X7R	O 9
C1301	126539-1	10UF 16V 5.5MM HIGH SMD	O 4
C1301X	126539-1	10UF 16V 5.5MM HIGH SMD	O 9
C1302	A11369-270K2	27PF 50V 10% NPO 0805 T/R	P 5
C1302X	A11369-270K2	27PF 50V 10% NPO 0805 T/R	P 10
C1303	A11369-680J2	CAP, 68PF 5% 50V SMT 0805	P 4
C1303X	A11369-680J2	CAP, 68PF 5% 50V SMT 0805	P 10
C1304	A11427-104K2	.1UF 50V CHIP CAP 10% 0805 X7R	O 5
C1304X	A11427-104K2	.1UF 50V CHIP CAP 10% 0805 X7R	O 10
C1305	A11427-104K2	.1UF 50V CHIP CAP 10% 0805 X7R	O 5
C1305X	A11427-104K2	.1UF 50V CHIP CAP 10% 0805 X7R	O 10
C1306	A11427-104K2	.1UF 50V CHIP CAP 10% 0805 X7R	O 4
C1306X	A11427-104K2	.1UF 50V CHIP CAP 10% 0805 X7R	O 10
C1307	A11427-104K2	.1UF 50V CHIP CAP 10% 0805 X7R	O 1
C1307X	A11427-104K2	.1UF 50V CHIP CAP 10% 0805 X7R	O 7
C1308	126539-1	10UF 16V 5.5MM HIGH SMD	O 2
C1308X	126539-1	10UF 16V 5.5MM HIGH SMD	O 8
C1309	A11369-270K2	27PF 50V 10% NPO 0805 T/R	P 2
C1309X	A11369-270K2	27PF 50V 10% NPO 0805 T/R	P 8
C1310	A11369-680J2	CAP, 68PF 5% 50V SMT 0805	P 2
C1310X	A11369-680J2	CAP, 68PF 5% 50V SMT 0805	P 8
C1311	A11427-104K2	.1UF 50V CHIP CAP 10% 0805 X7R	O 2
C1311X	A11427-104K2	.1UF 50V CHIP CAP 10% 0805 X7R	O 8
C1312	A11427-104K2	.1UF 50V CHIP CAP 10% 0805 X7R	O 2
C1312X	A11427-104K2	.1UF 50V CHIP CAP 10% 0805 X7R	O 7
C1313	A11427-104K2	.1UF 50V CHIP CAP 10% 0805 X7R	O 1
C1313X	A11427-104K2	.1UF 50V CHIP CAP 10% 0805 X7R	O 7
C1314	A11369-102J2	.001UF 50V 5% NPO MLC 0805 T/R	O 3
C1314X	A11369-102J2	.001UF 50V 5% NPO MLC 0805 T/R	O 9
C1315	A11369-680J2	CAP, 68PF 5% 50V SMT 0805	O 3
C1315X	A11369-680J2	CAP, 68PF 5% 50V SMT 0805	O 8
C1316	A11427-104K2	.1UF 50V CHIP CAP 10% 0805 X7R	P 3
C1316X	A11427-104K2	.1UF 50V CHIP CAP 10% 0805 X7R	P 9
C1317	132042-1	CAP, 100UF 35V ALUM ELECT SMT	P 3
C1317X	132042-1	CAP, 100UF 35V ALUM ELECT SMT	P 9
C1318	A11369-680J2	CAP, 68PF 5% 50V SMT 0805	O 3
C1318X	A11369-680J2	CAP, 68PF 5% 50V SMT 0805	O 9
C1319	A11369-102J2	.001UF 50V 5% NPO MLC 0805 T/R	O 3
C1319X	A11369-102J2	.001UF 50V 5% NPO MLC 0805 T/R	O 9
CB1	136851-1	CIRCUIT BREAKER/SWITCH, 50A	A 5
D1	136817-1	DIODE, BRIDGE, 1A 600V SMD	E 4
D2	126620-1	DIODE, 600V 1A SMB ULTRAFAST	D 6
D3	C 9283-0	DIODE, MMBD4148/914 SOT-23 SMT	D 5

D4	125255-1	DIODE, ULTRAFAST 200V 1A SMA	E 5
D5	125255-1	DIODE, ULTRAFAST 200V 1A SMA	E 5
D6	C10144-1	DIODE, ZENER 15V SOT-23	D 5
D7	126621-1	DIODE, 180V 3W SMB ZENER	D 6
D8	C 9283-0	DIODE, MMBD4148/914 SOT-23 SMT	D 5
D9	C 9283-0	DIODE, MMBD4148/914 SOT-23 SMT	D 5
D21		OPEN	A 9
D21X		OPEN	A 9
D22	136292-1	DIODE, EMCON 600V 30A TO220	B 9
D22X	136330-1	CLIP, TO-220	B 9
D23	136292-1	DIODE, EMCON 600V 30A TO220	B 9
D23X	136330-1	CLIP, TO-220	B 9
D24	136292-1	DIODE, EMCON 600V 30A TO220	C 9
D24X	136330-1	CLIP, TO-220	C 9
D25	136292-1	DIODE, EMCON 600V 30A TO220	C 9
D25X	136330-1	CLIP, TO-220	C 9
D26		OPEN	C 9
D26X		OPEN	C 9
D27		OPEN	D 9
D27X		OPEN	D 9
D28	136292-1	DIODE, EMCON 600V 30A TO220	D 9
D28X	136330-1	CLIP, TO-220	D 9
D29	136292-1	DIODE, EMCON 600V 30A TO220	E 9
D29X	136330-1	CLIP, TO-220	E 9
D30	136292-1	DIODE, EMCON 600V 30A TO220	E 9
D30X	136330-1	CLIP, TO-220	E 9
D31	136292-1	DIODE, EMCON 600V 30A TO220	F 9
D31X	136330-1	CLIP, TO-220	F 9
D32		OPEN	F 9
D32X		OPEN	F 9
D33		OPEN	A 9
D33X		OPEN	A 9
D34	136292-1	DIODE, EMCON 600V 30A TO220	B 9
D34X	136330-1	CLIP, TO-220	B 9
D35	136292-1	DIODE, EMCON 600V 30A TO220	B 9
D35X	136330-1	CLIP, TO-220	B 9
D36	136292-1	DIODE, EMCON 600V 30A TO220	C 9
D36X	136330-1	CLIP, TO-220	C 9
D37	136292-1	DIODE, EMCON 600V 30A TO220	C 9
D37X	136330-1	CLIP, TO-220	C 9
D38		OPEN	C 9
D38X		OPEN	C 9
D39		OPEN	D 9
D39X		OPEN	D 9
D40	136292-1	DIODE, EMCON 600V 30A TO220	D 9
D40X	136330-1	CLIP, TO-220	D 9
D41	136292-1	DIODE, EMCON 600V 30A TO220	E 9
D41X	136330-1	CLIP, TO-220	E 9
D42	136292-1	DIODE, EMCON 600V 30A TO220	E 9
D42X	136330-1	CLIP, TO-220	E 9
D43	136292-1	DIODE, EMCON 600V 30A TO220	F 9

D43X	136330-1	CLIP, TO-220	F 9
D44		OPEN	F 9
D44X		OPEN	F 9
D45		OPEN	A 8
D46	C 9283-0	DIODE, MMBD4148/914 SOT-23 SMT	B 8
D47	C 9283-0	DIODE, MMBD4148/914 SOT-23 SMT	B 8
D48	C 9283-0	DIODE, MMBD4148/914 SOT-23 SMT	B 8
D49	C 9283-0	DIODE, MMBD4148/914 SOT-23 SMT	C 8
D50		OPEN	C 8
D51		OPEN	D 8
D52	C 9283-0	DIODE, MMBD4148/914 SOT-23 SMT	D 8
D53	C 9283-0	DIODE, MMBD4148/914 SOT-23 SMT	E 8
D54	C 9283-0	DIODE, MMBD4148/914 SOT-23 SMT	E 8
D55	C 9283-0	DIODE, MMBD4148/914 SOT-23 SMT	E 8
D56		OPEN	F 8
D57		OPEN	A 10
D58	C 9283-0	DIODE, MMBD4148/914 SOT-23 SMT	B 10
D59	C 9283-0	DIODE, MMBD4148/914 SOT-23 SMT	B 10
D60	C 9283-0	DIODE, MMBD4148/914 SOT-23 SMT	C 10
D61	C 9283-0	DIODE, MMBD4148/914 SOT-23 SMT	C 10
D62		OPEN	C 10
D63		OPEN	D 10
D64	C 9283-0	DIODE, MMBD4148/914 SOT-23 SMT	D 10
D65	C 9283-0	DIODE, MMBD4148/914 SOT-23 SMT	E 10
D66	C 9283-0	DIODE, MMBD4148/914 SOT-23 SMT	E 10
D67	C 9283-0	DIODE, MMBD4148/914 SOT-23 SMT	F 10
D68		OPEN	F 10
D69	136294-1	DIODE, 30A 600V HYPERFAST	I 9
D69X	136330-1	CLIP, TO-220	I 9
D70	136294-1	DIODE, 30A 600V HYPERFAST	H 9
D70X	136330-1	CLIP, TO-220	H 9
D71	136294-1	DIODE, 30A 600V HYPERFAST	H 9
D71X	136330-1	CLIP, TO-220	H 9
D72	136294-1	DIODE, 30A 600V HYPERFAST	G 10
D72X	136330-1	CLIP, TO-220	G 9
D73	134827-1	DIODE, SCHOTTKY 100V 3A SMC	I 9
D74	134827-1	DIODE, SCHOTTKY 100V 3A SMC	I 10
D75	134827-1	DIODE, SCHOTTKY 100V 3A SMC	I 10
D76	134827-1	DIODE, SCHOTTKY 100V 3A SMC	I 10
D77	136293-1	DIODE, 1600V 48A ISOPLUS 247	G 8
D77X	136330-1	CLIP, TO-220	G 8
D78	136293-1	DIODE, 1600V 48A ISOPLUS 247	H 7
D78X	136330-1	CLIP, TO-220	H 7
D79	136293-1	DIODE, 1600V 48A ISOPLUS 247	G 7
D79X	136330-1	CLIP, TO-220	H 8
D80	136293-1	DIODE, 1600V 48A ISOPLUS 247	I 7
D80X	136330-1	CLIP, TO-220	I 7
D101	137118-1	DIODE, 30V 200mA DUAL SCHOTTKY	J 5
D102	137118-1	DIODE, 30V 200mA DUAL SCHOTTKY	J 6
D104	137118-1	DIODE, 30V 200mA DUAL SCHOTTKY	K 6
D107	137118-1	DIODE, 30V 200mA DUAL SCHOTTKY	L 6

D109	137118-1	DIODE, 30V 200mA DUAL SCHOTTKY	L 6
D110	C 9773-0	DIODE, ZENER 5.1V 1N5231 SMT	L 5
D111	C 9283-0	DIODE, MMBD4148/914 SOT-23 SMT	M 5
D112	C 9283-0	DIODE, MMBD4148/914 SOT-23 SMT	K 5
D113	137118-1	DIODE, 30V 200mA DUAL SCHOTTKY	I 5
D114	137118-1	DIODE, 30V 200mA DUAL SCHOTTKY	I 5
D115	C 9283-0	DIODE, MMBD4148/914 SOT-23 SMT	L 5
D116	137118-1	DIODE, 30V 200mA DUAL SCHOTTKY	J 6
D118	137118-1	DIODE, 30V 200mA DUAL SCHOTTKY	H 6
D119	137118-1	DIODE, 30V 200mA DUAL SCHOTTKY	I 4
D120	137118-1	DIODE, 30V 200mA DUAL SCHOTTKY	H 5
D121	C 9283-0	DIODE, MMBD4148/914 SOT-23 SMT	H 6
D122	C 9283-0	DIODE, MMBD4148/914 SOT-23 SMT	M 5
D123	C 9283-0	DIODE, MMBD4148/914 SOT-23 SMT	N 5
D124	137118-1	DIODE, 30V 200mA DUAL SCHOTTKY	M 5
D125	137118-1	DIODE, 30V 200mA DUAL SCHOTTKY	M 4
D126	137118-1	DIODE, 30V 200mA DUAL SCHOTTKY	L 4
D127	137118-1	DIODE, 30V 200mA DUAL SCHOTTKY	L 4
D1300	C 9283-0	DIODE, MMBD4148/914 SOT-23 SMT	P 5
D1300X	C 9283-0	DIODE, MMBD4148/914 SOT-23 SMT	P 10
D1301	125255-1	DIODE, ULTRAFAST 200V 1A SMA	P 5
D1301X	125255-1	DIODE, ULTRAFAST 200V 1A SMA	P 10
D1302	C10144-1	DIODE, ZENER 15V SOT-23	O 4
D1302X	C10144-1	DIODE, ZENER 15V SOT-23	O 9
D1303	136010-1	DIODE, ZENER 500MW 12V SOD 123	P 4
D1303X	136010-1	DIODE, ZENER 500MW 12V SOD 123	P 9
D1304	C10370-2	DIODE, ZENER 10V MMBZ5240BL	P 4
D1304X	C10370-2	DIODE, ZENER 10V MMBZ5240BL	P 10
D1305	C 9283-0	DIODE, MMBD4148/914 SOT-23 SMT	P 5
D1305X	C 9283-0	DIODE, MMBD4148/914 SOT-23 SMT	P 10
D1306	C 9283-0	DIODE, MMBD4148/914 SOT-23 SMT	P 2
D1306X	C 9283-0	DIODE, MMBD4148/914 SOT-23 SMT	P 8
D1307	125255-1	DIODE, ULTRAFAST 200V 1A SMA	P 2
D1307X	125255-1	DIODE, ULTRAFAST 200V 1A SMA	P 8
D1308	C10144-1	DIODE, ZENER 15V SOT-23	O 2
D1308X	C10144-1	DIODE, ZENER 15V SOT-23	O 8
D1309	136010-1	DIODE, ZENER 500MW 12V SOD 123	P 1
D1309X	136010-1	DIODE, ZENER 500MW 12V SOD 123	P 7
D1310	C10370-2	DIODE, ZENER 10V MMBZ5240BL	P 1
D1310X	C10370-2	DIODE, ZENER 10V MMBZ5240BL	P 7
D1311	C 9283-0	DIODE, MMBD4148/914 SOT-23 SMT	P 2
D1311X	C 9283-0	DIODE, MMBD4148/914 SOT-23 SMT	P 8
D1312		OPEN	O 3
D1312X		OPEN	O 9
D1313	C 9283-0	DIODE, MMBD4148/914 SOT-23 SMT	O 3
D1313X	C 9283-0	DIODE, MMBD4148/914 SOT-23 SMT	O 8
D1314	C 9283-0	DIODE, MMBD4148/914 SOT-23 SMT	O 3
D1314X	C 9283-0	DIODE, MMBD4148/914 SOT-23 SMT	O 9
D1315		OPEN	O 3
D1315X		OPEN	O 9
E1	136343-1	LED, GREEN 1206 INNER LENS	F 6

F1	A10285-46	FUSE, .5A 250V TIME DELAY	F 4
F1X	134380-1	FUSE CLIP, PC MNT 5MM T/A	E 4
F1XX	134380-1	FUSE CLIP, PC MNT 5MM T/A	F 4
HS21	136497-2	HEATSINK, NMS SMPS RECTIFIER	I 8
HS22	136497-2	HEATSINK, NMS SMPS RECTIFIER	G 8
HS23	137468-1	HEATSINK, NEMESIS IGBT	B 10
HS24	137468-1	HEATSINK, NEMESIS IGBT	D 10
HS25	137468-1	HEATSINK, NEMESIS IGBT	B 8
HS26	137468-1	HEATSINK, NEMESIS IGBT	D 8
HW1	101016-1	LBL, BARCODE	I 7
HW2	101016-1	LBL, BARCODE	B 6
HW3	101016-1	LBL, BARCODE	J 4*
HW4	101016-1	LBL, BARCODE	O 4
HW5	101016-1	LBL, BARCODE	O 9
HW20	A10019-16	6 X 32 PCB CAPTIVE NUT	B 11
HW21	A10019-16	6 X 32 PCB CAPTIVE NUT	E 11
J1A	101031-1	.250 FASTON, AUTO INSERTABLE	H 3
J1B	101031-1	.250 FASTON, AUTO INSERTABLE	H 3
J2A	101031-1	.250 FASTON, AUTO INSERTABLE	H 2
J2B	101031-1	.250 FASTON, AUTO INSERTABLE	H 2
J3	136720-1	HDR, LATCH/EJECT 10 PIN .1X.1	F 5
J21	136937-1	RBN, 10PIN PCB VNT HDR 4.0" L	G 11
J22	132551-1	RECEPT, 8PIN VERT .1 CTRS SMD	D 8
J23	132551-1	RECEPT, 8PIN VERT .1 CTRS SMD	B 8
J24	132551-1	RECEPT, 8PIN VERT .1 CTRS SMD	E 8
J25	132551-1	RECEPT, 8PIN VERT .1 CTRS SMD	C 10
J26	132551-1	RECEPT, 8PIN VERT .1 CTRS SMD	B 10
J27	132551-1	RECEPT, 8PIN VERT .1 CTRS SMD	E 10
J28	131314-1	RECEPT, 30P VERT 2ROW .1 CTR	D 11
J100	133931-1	HDR, 30 PIN DUAL ROW R/A	J 5
L1	138048-1	INDUCTOR, CM 1.5MH HORIZONTAL	B 2
L2	138048-1	INDUCTOR, CM 1.5MH HORIZONTAL	E 2
L4	138048-1	INDUCTOR, CM 1.5MH HORIZONTAL	G 2
L21	137189-1	INDUCTOR, RESONANT SM/MED	M 10
L22	137119-1	INDUCTOR, 22UH 2520 SMT T/R	I 11
L23	137119-1	INDUCTOR, 22UH 2520 SMT T/R	I 11
L101	137119-1	INDUCTOR, 22UH 2520 SMT T/R	I 4
L102	137119-1	INDUCTOR, 22UH 2520 SMT T/R	I 4
P21	132041-2	CBL, 26P PCB MNT HDR - IDC SKT	F 11
P22	131315-2	HDR, 6PIN MATE N LOK IN LINE	H 11
P1300	132533-1	HDR, 8PIN .1 CTR R/A SMD	O 4
P1300X	132533-1	HDR, 8PIN .1 CTR R/A SMD	O 10
P1301	132533-1	HDR, 8PIN .1 CTR R/A SMD	O 2
P1301X	132533-1	HDR, 8PIN .1 CTR R/A SMD	O 7
P1302	132533-1	HDR, 8PIN .1 CTR R/A SMD	O 3
P1302X	132533-1	HDR, 8PIN .1 CTR R/A SMD	O 9
PWB1	136542-8	PWB, I-TECH PANEL 3	A 1
Q21		OPEN	A 8
Q21X		OPEN	A 8
Q22	136291-1	IGBT, NPT 600V 30A TO220	B 8
Q22X	136330-1	CLIP, TO-220	B 8

Q23	136291-1	IGBT, NPT 600V 30A TO220	B 8
Q23X	136330-1	CLIP, TO-220	B 8
Q24	136291-1	IGBT, NPT 600V 30A TO220	C 8
Q24X	136330-1	CLIP, TO-220	C 8
Q25	136291-1	IGBT, NPT 600V 30A TO220	C 8
Q25X	136330-1	CLIP, TO-220	C 8
Q26		OPEN	C 8
Q26X		OPEN	C 8
Q27		OPEN	D 8
Q27X		OPEN	D 8
Q28	136291-1	IGBT, NPT 600V 30A TO220	D 8
Q28X	136330-1	CLIP, TO-220	D 8
Q29	136291-1	IGBT, NPT 600V 30A TO220	E 8
Q29X	136330-1	CLIP, TO-220	E 8
Q30	136291-1	IGBT, NPT 600V 30A TO220	E 8
Q30X	136330-1	CLIP, TO-220	E 8
Q31	136291-1	IGBT, NPT 600V 30A TO220	F 8
Q31X	136330-1	CLIP, TO-220	F 8
Q32		OPEN	F 8
Q32X		OPEN	F 8
Q33		OPEN	A 10
Q33X		OPEN	A 10
Q34	136291-1	IGBT, NPT 600V 30A TO220	B 10
Q34X	136330-1	CLIP, TO-220	B 10
Q35	136291-1	IGBT, NPT 600V 30A TO220	B 10
Q35X	136330-1	CLIP, TO-220	B 10
Q36	136291-1	IGBT, NPT 600V 30A TO220	C 10
Q36X	136330-1	CLIP, TO-220	C 10
Q37	136291-1	IGBT, NPT 600V 30A TO220	C 10
Q37X	136330-1	CLIP, TO-220	C 10
Q38		OPEN	C 10
Q38X		OPEN	C 10
Q39		OPEN	D 10
Q39X		OPEN	D 10
Q40	136291-1	IGBT, NPT 600V 30A TO220	D 10
Q40X	136330-1	CLIP, TO-220	D 10
Q41	136291-1	IGBT, NPT 600V 30A TO220	E 10
Q41X	136330-1	CLIP, TO-220	E 10
Q42	136291-1	IGBT, NPT 600V 30A TO220	E 10
Q42X	136330-1	CLIP, TO-220	E 10
Q43	136291-1	IGBT, NPT 600V 30A TO220	F 10
Q43X	136330-1	CLIP, TO-220	F 10
Q44		OPEN	F 10
Q44X		OPEN	F 10
Q45	C 3810-6	MPSA42 300V NPN T/R	B 11
Q46	137218-1	SCR, 12A MCR12DSN DPAK 369A	A 11
Q101	C10421-3	FET, 60V N-CH 2N7002LT1 SOT-23	J 6
Q103	C 7448-1	MMBT3904 CHIP NPN	M 4
Q105	C 7448-1	MMBT3904 CHIP NPN	M 5
Q106	C 7448-1	MMBT3904 CHIP NPN	M 5
Q107	C 7448-1	MMBT3904 CHIP NPN	M 5

Q108	C10421-3	FET, 60V N-CH 2N7002LT1 SOT-23	J 6
Q109	C 7448-1	MMBT3904 CHIP NPN	M 5
Q110	C10421-3	FET, 60V N-CH 2N7002LT1 SOT-23	H 5
Q111	C10421-3	FET, 60V N-CH 2N7002LT1 SOT-23	H 5
Q112	C10421-3	FET, 60V N-CH 2N7002LT1 SOT-23	H 5
Q113	C10421-3	FET, 60V N-CH 2N7002LT1 SOT-23	I 6
Q114	C 7448-1	MMBT3904 CHIP NPN	K 6
Q115	125798-1	TRANSISTOR,MMBT3906LTI PNP SMT	K 6
Q116	C 7448-1	MMBT3904 CHIP NPN	I 5
Q117	125798-1	TRANSISTOR,MMBT3906LTI PNP SMT	L 5
Q1300	125798-1	TRANSISTOR,MMBT3906LTI PNP SMT	P 4
Q1300X	125798-1	TRANSISTOR,MMBT3906LTI PNP SMT	P 9
Q1301	C 7448-1	MMBT3904 CHIP NPN	P 4
Q1301X	C 7448-1	MMBT3904 CHIP NPN	P 10
Q1302	125798-1	TRANSISTOR,MMBT3906LTI PNP SMT	P 1
Q1302X	125798-1	TRANSISTOR,MMBT3906LTI PNP SMT	P 7
Q1303	C 7448-1	MMBT3904 CHIP NPN	P 2
Q1303X	C 7448-1	MMBT3904 CHIP NPN	P 7
Q1304	136730-1	MOSFET, 60V 0.5A	O 3
Q1304X	136730-1	MOSFET, 60V 0.5A	O 8
Q1305	136730-1	MOSFET, 60V 0.5A	O 3
Q1305X	136730-1	MOSFET, 60V 0.5A	O 9
R1	A11368-10043	1.MOHM .25W 1% CHIP 1210	H 4
R2	A11368-10043	1.MOHM .25W 1% CHIP 1210	H 4
R5	A11368-15021	15.0K, 0.10W 1% MF 0805	C 5
R6	A11368-20011	2.0K, 0.10W 1% MF 0805	D 5
R7	133910-1	RES, 27KOHM 5% 2W RAD T/R	D 5
R8	A11368-10R01	10 OHM .1W 1% 0805 T/R	D 5
R10		OPEN	F 5
R11	A11368-10021	10K 1/10W 1% SMD 0805 T/R	F 5
R12	C 9930-6	11.8 OHM 3W 5% WW T/R	E 4
R13	A11368-68111	6.81K 0.10W 1% CHIP 0805	F 6
R21		OPEN	A 8
R22	A11371-5R11	5.1 OHM 0.1W 5% 0805 SMT	B 8
R23	A11371-5R11	5.1 OHM 0.1W 5% 0805 SMT	B 8
R24	A11371-5R11	5.1 OHM 0.1W 5% 0805 SMT	B 8
R25	A11371-5R11	5.1 OHM 0.1W 5% 0805 SMT	C 8
R26		OPEN	C 8
R27		OPEN	D 8
R28	A11371-5R11	5.1 OHM 0.1W 5% 0805 SMT	D 8
R29	A11371-5R11	5.1 OHM 0.1W 5% 0805 SMT	E 8
R30	A11371-5R11	5.1 OHM 0.1W 5% 0805 SMT	E 8
R31	A11371-5R11	5.1 OHM 0.1W 5% 0805 SMT	F 8
R32		OPEN	F 8
R33		OPEN	A 10
R34	A11371-5R11	5.1 OHM 0.1W 5% 0805 SMT	B 10
R35	A11371-5R11	5.1 OHM 0.1W 5% 0805 SMT	B 10
R36	A11371-5R11	5.1 OHM 0.1W 5% 0805 SMT	C 10
R37	A11371-5R11	5.1 OHM 0.1W 5% 0805 SMT	C 10
R38		OPEN	C 10
R39		OPEN	D 10

R40	A11371-5R11	5.1 OHM 0.1W 5% 0805 SMT	E 10
R41	A11371-5R11	5.1 OHM 0.1W 5% 0805 SMT	E 10
R42	A11371-5R11	5.1 OHM 0.1W 5% 0805 SMT	E 10
R43	A11371-5R11	5.1 OHM 0.1W 5% 0805 SMT	F 10
R44		OPEN	F 10
R45		OPEN	A 8
R46	A11368-1R001	1 OHM .1W 1% 0805 T/R	B 8
R47	A11368-1R001	1 OHM .1W 1% 0805 T/R	B 8
R48	A11368-1R001	1 OHM .1W 1% 0805 T/R	C 8
R49	A11368-1R001	1 OHM .1W 1% 0805 T/R	C 8
R50		OPEN	C 8
R51		OPEN	D 8
R52	A11368-1R001	1 OHM .1W 1% 0805 T/R	E 8
R53	A11368-1R001	1 OHM .1W 1% 0805 T/R	E 8
R54	A11368-1R001	1 OHM .1W 1% 0805 T/R	E 8
R55	A11368-1R001	1 OHM .1W 1% 0805 T/R	E 8
R56		OPEN	F 8
R57		OPEN	A 10
R58	A11368-1R001	1 OHM .1W 1% 0805 T/R	B 10
R59	A11368-1R001	1 OHM .1W 1% 0805 T/R	B 10
R60	A11368-1R001	1 OHM .1W 1% 0805 T/R	B 10
R61	A11368-1R001	1 OHM .1W 1% 0805 T/R	C 10
R62		OPEN	C 10
R63		OPEN	D 10
R64	A11368-1R001	1 OHM .1W 1% 0805 T/R	D 10
R65	A11368-1R001	1 OHM .1W 1% 0805 T/R	E 10
R66	A11368-1R001	1 OHM .1W 1% 0805 T/R	E 10
R67	A11368-1R001	1 OHM .1W 1% 0805 T/R	E 10
R68		OPEN	F 10
R69	A11368-10043	1.MOHM .25W 1% CHIP 1210	C 11
R70	A11368-10043	1.MOHM .25W 1% CHIP 1210	C 11
R72	A11371-8235	82K OHM 5% 1W 2512 T/R	I 9
R73	A11371-8235	82K OHM 5% 1W 2512 T/R	G 10
R74	A11371-8235	82K OHM 5% 1W 2512 T/R	I 9
R75	A11371-8235	82K OHM 5% 1W 2512 T/R	G 10
R76	A11368-10011	1.KOHM .1W 1% CHIP 0805	C 11
R77	A11368-10011	1.KOHM .1W 1% CHIP 0805	A 11
R78	A11368-10R01	10 OHM .1W 1% 0805 T/R	B 11
R79	A11368-40211	4.02K 1/10W 1% SMD 0805 T/R	C 11
R80	A11368-40211	4.02K 1/10W 1% SMD 0805 T/R	C 11
R81	A11368-40211	4.02K 1/10W 1% SMD 0805 T/R	C 11
R82	A11368-40211	4.02K 1/10W 1% SMD 0805 T/R	C 11
R83	A11368-40211	4.02K 1/10W 1% SMD 0805 T/R	C 11
R84	A11368-40211	4.02K 1/10W 1% SMD 0805 T/R	C 11
R94	A11368-10043	1.MOHM .25W 1% CHIP 1210	E 7
R95	A11368-10043	1.MOHM .25W 1% CHIP 1210	E 7
R99	134117-2	MOV, 300V	G 7
R101	A11368-21521	21.5 KOHM .1W 1% 0805 T/R	J 5
R102	A11368-21521	21.5 KOHM .1W 1% 0805 T/R	J 5
R103	A11368-10020	RES, 10.0 KOHM 1/16W 1% 0603	J 5
R104	A11368-10020	RES, 10.0 KOHM 1/16W 1% 0603	J 5

R105	A11368-10020	RES, 10.0 KOHM 1/16W 1% 0603	J 5
R106	A11368-10020	RES, 10.0 KOHM 1/16W 1% 0603	J 5
R107	A11368-49910	RES, 4.99 KOHM 1/16W 1% 0603	J 5
R108	A11368-10020	RES, 10.0 KOHM 1/16W 1% 0603	J 5
R109	A11368-49910	RES, 4.99 KOHM 1/16W 1% 0603	J 6
R110	A11368-10020	RES, 10.0 KOHM 1/16W 1% 0603	J 5
R111	A11368-10020	RES, 10.0 KOHM 1/16W 1% 0603	J 6
R112	A11368-16910	RES, 1.69 KOHM 1/16W 1% 0603	J 6
R113	A11368-10020	RES, 10.0 KOHM 1/16W 1% 0603	K 5
R114	A11368-28031	RES, 280K .1W 0805 SMT T/R	K 5
R115	A11368-49910	RES, 4.99 KOHM 1/16W 1% 0603	H 5
R116	A11368-10010	RES, 1.0 KOHM 1/16W 1% 0603	H 5
R117	A11368-49910	RES, 4.99 KOHM 1/16W 1% 0603	J 5
R118	A11368-10010	RES, 1.0 KOHM 1/16W 1% 0603	H 5
R119	A11368-10020	RES, 10.0 KOHM 1/16W 1% 0603	H 5
R120	A11368-18221	18.2KOHM 0.1W 1% CHIP 0805	H 5
R121	A11368-10031	100.KOHM .1W 1% CHIP 0805	K 5
R122	A11368-17421	17.4KOHM .1W 1% 0805 T/R	K 5
R123	A11368-10031	100.KOHM .1W 1% CHIP 0805	K 5
R124	A11368-17421	17.4KOHM .1W 1% 0805 T/R	L 5
R125	A11368-10020	RES, 10.0 KOHM 1/16W 1% 0603	L 5
R126	A11368-23231	232KOHM 1% 0.1W 0805	L 5
R127	A11368-10020	RES, 10.0 KOHM 1/16W 1% 0603	L 5
R128	A11368-23231	232KOHM 1% 0.1W 0805	L 5
R129	A11368-20020	RES, 20.0 KOHM 1/16W 1% 0603	L 5
R130	A11368-20020	RES, 20.0 KOHM 1/16W 1% 0603	L 5
R131	A11368-10020	RES, 10.0 KOHM 1/16W 1% 0603	L 6
R132	A11368-20020	RES, 20.0 KOHM 1/16W 1% 0603	L 5
R133	A11368-20020	RES, 20.0 KOHM 1/16W 1% 0603	L 6
R134	A11368-10010	RES, 1.0 KOHM 1/16W 1% 0603	L 6
R135	A11368-10020	RES, 10.0 KOHM 1/16W 1% 0603	L 5
R136	A11368-28021	RES, 28K 1% .1W SMT 0805	L 5
R137	A11368-71520	RES, 71.5 KOHM 1/16W 1% 0603	L 5
R138	A11368-10020	RES, 10.0 KOHM 1/16W 1% 0603	L 5
R139	A11368-30131	301K 1/10W 1% SMD 0805 T/R	L 5
R140	A11368-10020	RES, 10.0 KOHM 1/16W 1% 0603	L 5
R141	A11368-20020	RES, 20.0 KOHM 1/16W 1% 0603	L 5
R142	A11368-10020	RES, 10.0 KOHM 1/16W 1% 0603	I 5
R143	A11368-10030	RES, 100.0 KOHM 1/16W 1% 0603	I 5
R144	A11368-10040	RES, 1.00 MOHM 1/16W 1% 0603	I 5
R145	A11368-10040	RES, 1.00 MOHM 1/16W 1% 0603	H 5
R146	A11368-10020	RES, 10.0 KOHM 1/16W 1% 0603	H 5
R147	A11368-10030	RES, 100.0 KOHM 1/16W 1% 0603	H 5
R148	A11368-33221	33.2KOHM .1W 1% 0805 T/R	I 5
R150	A11368-10020	RES, 10.0 KOHM 1/16W 1% 0603	J 5
R151	A11368-10010	RES, 1.0 KOHM 1/16W 1% 0603	J 5
R152	A11368-10030	RES, 100.0 KOHM 1/16W 1% 0603	I 5
R153	A11368-24920	RES, 24.9 KOHM 1/16W 1% 0603	I 5
R154	A11368-78721	78.7KOHM 0.1W 1% 0805 T/R	I 5
R155	A11368-10031	100.KOHM .1W 1% CHIP 0805	L 5
R156	A11368-23721	23.7K .10W 1% CHIP 0805	K 4

R157	A11368-75021	75K 1/10W 1% SMD 0805 T/R	L 4
R158	A11368-10040	RES, 1.00 MOHM 1/16W 1% 0603	L 4
R159	A11368-10031	100.KOHM .1W 1% CHIP 0805	L 5
R160	A11368-13011	1.3KOHM .1W 1% 0805 T/R	L 4
R161	A11368-86611	RES, 8.66 KOHM 1/10W 1% 0805	L 4
R162	A11368-86611	RES, 8.66 KOHM 1/10W 1% 0805	L 4
R163	A11368-68120	RES, 68.1 KOHM 1/16W 1% 0603	M 6
R164	A11371-1824	1.8K .5W 5% SMD CHIP 2010	L 5
R165	A11368-10020	RES, 10.0 KOHM 1/16W 1% 0603	K 5
R166	A11368-10030	RES, 100.0 KOHM 1/16W 1% 0603	L 5
R167	A11368-10030	RES, 100.0 KOHM 1/16W 1% 0603	M 5
R168	A11368-10520	RES, 10.5 KOHM 1/16W 1% 0603	M 6
R169	A11371-1824	1.8K .5W 5% SMD CHIP 2010	M 4
R170	A11368-68120	RES, 68.1 KOHM 1/16W 1% 0603	M 6
R171	A11368-10030	RES, 100.0 KOHM 1/16W 1% 0603	M 5
R172	A11368-20020	RES, 20.0 KOHM 1/16W 1% 0603	M 5
R173	A11368-20020	RES, 20.0 KOHM 1/16W 1% 0603	M 5
R174	A11368-20020	RES, 20.0 KOHM 1/16W 1% 0603	M 5
R175	A11368-31611	3.16K 0.1W 1% 0805 T/R	M 5
R176	A11368-20020	RES, 20.0 KOHM 1/16W 1% 0603	M 5
R177	A11368-53621	RES, 53.6K 1% 1W SMT 0805	M 5
R178	A11368-10520	RES, 10.5 KOHM 1/16W 1% 0603	M 6
R179	A11371-1824	1.8K .5W 5% SMD CHIP 2010	M 5
R180	A11368-10020	RES, 10.0 KOHM 1/16W 1% 0603	J 5
R181	A11368-20020	RES, 20.0 KOHM 1/16W 1% 0603	I 5
R182	A11368-60421	60.4K 1/10W 1% SMD 0805 T/R	I 5
R183	A11368-49910	RES, 4.99 KOHM 1/16W 1% 0603	K 5
R184	A11368-10010	RES, 1.0 KOHM 1/16W 1% 0603	J 5
R185	A11368-20020	RES, 20.0 KOHM 1/16W 1% 0603	L 5
R186	A11368-35711	RES, 3.57K 1% 0.10W 0805	J 5
R187	A11368-10030	RES, 100.0 KOHM 1/16W 1% 0603	J 5
R188	A11368-10R01	10 OHM .1W 1% 0805 T/R	K 6
R189	A11368-10020	RES, 10.0 KOHM 1/16W 1% 0603	K 5
R190	A11368-10040	RES, 1.00 MOHM 1/16W 1% 0603	K 5
R191	A11368-24901	249 OHM 0.1W 1% 0805 T/R	G 4
R192	A11368-10040	RES, 1.00 MOHM 1/16W 1% 0603	I 5
R193	A11368-49931	499KOHM .1W 1% 0805 T/R	J 6
R194	A11368-10020	RES, 10.0 KOHM 1/16W 1% 0603	J 6
R195	A11368-40211	4.02K 1/10W 1% SMD 0805 T/R	I 5
R196	A11368-40211	4.02K 1/10W 1% SMD 0805 T/R	I 5
R197	A11368-33221	33.2KOHM .1W 1% 0805 T/R	H 5
R198	A11368-20011	2.0K, 0.10W 1% MF 0805	I 5
R199	A11368-20011	2.0K, 0.10W 1% MF 0805	I 5
R200	A11368-10000	RES, 100 OHM 1/16W 1% 0603	H 5
R201	A11371-0R01	RES, 0 OHM 0805 50 MILOHM MAX	G 5
R202		OPEN	G 5
R203	A11368-10R01	10 OHM .1W 1% 0805 T/R	M 5
R204	A11368-16230	RES, 162K OHM 1% 1/16W 0603	L 5
R205	A11368-13030	RES, 130 KOHM 1/16W 1% 0603	M 5
R207	A11368-20011	2.0K, 0.10W 1% MF 0805	L 5
R208	A11368-10R01	10 OHM .1W 1% 0805 T/R	K 4

R209	A11368-30121	30.1K, 0.10W 1% MF 0805	H 5
R210	A11368-10020	RES, 10.0 KOHM 1/16W 1% 0603	H 5
R211	A11368-10020	RES, 10.0 KOHM 1/16W 1% 0603	H 5
R212	A11368-10000	RES, 100 OHM 1/16W 1% 0603	K 5
R213	A11368-10010	RES, 1.0 KOHM 1/16W 1% 0603	K 5
R214	A11368-10010	RES, 1.0 KOHM 1/16W 1% 0603	K 6
R215	A11368-10000	RES, 100 OHM 1/16W 1% 0603	K 5
R216	A11368-10020	RES, 10.0 KOHM 1/16W 1% 0603	J 5
R217	A11368-22120	RES, 22.1 KOHM 1% 1/16W 0603	K 5
R218	A11368-30121	30.1K, 0.10W 1% MF 0805	J 5
R219	A11368-22R11	22.1 OHM 0.1W 1% 0805 T/R	I 6
R220	A11368-22R11	22.1 OHM 0.1W 1% 0805 T/R	I 6
R221	A11368-54911	5.49K 0.1W 1% 0805 T/R	J 5
R222	A11368-10031	100.KOHM .1W 1% CHIP 0805	I 5
R223	A11368-23711	RES, 2.37K 1% 0.1W SMT 0805	J 5
R224	A11368-14720	RES, 14.7 KOHM 1/16W 1% 0603	I 5
R999	A11368-10011	1.KOHM .1W 1% CHIP 0805	N 7
R1022	A11371-2715	270 OHM 1W 5% 2512 SMT T/R	J 8
R1023	A11371-2715	270 OHM 1W 5% 2512 SMT T/R	J 8
R1024	A11371-2715	270 OHM 1W 5% 2512 SMT T/R	J 8
R1025	A11371-2715	270 OHM 1W 5% 2512 SMT T/R	K 8
R1026	A11371-2715	270 OHM 1W 5% 2512 SMT T/R	J 8
R1027	A11371-2715	270 OHM 1W 5% 2512 SMT T/R	J 8
R1028	A11371-2715	270 OHM 1W 5% 2512 SMT T/R	K 8
R1029	A11371-2715	270 OHM 1W 5% 2512 SMT T/R	K 8
R1030	A11371-2715	270 OHM 1W 5% 2512 SMT T/R	J 8
R1031	A11371-2715	270 OHM 1W 5% 2512 SMT T/R	J 8
R1300	A11368-47511	4.75KOHM 0.10W 1% CHIP 0805	O 5
R1300X	A11368-47511	4.75KOHM 0.10W 1% CHIP 0805	O 10
R1301	A11368-10021	10K 1/10W 1% SMD 0805 T/R	O 4
R1301X	A11368-10021	10K 1/10W 1% SMD 0805 T/R	O 9
R1302	A11368-10011	1.KOHM .1W 1% CHIP 0805	P 4
R1302X	A11368-10011	1.KOHM .1W 1% CHIP 0805	P 9
R1303	A11368-10021	10K 1/10W 1% SMD 0805 T/R	P 4
R1303X	A11368-10021	10K 1/10W 1% SMD 0805 T/R	P 9
R1304	A11368-10011	1.KOHM .1W 1% CHIP 0805	O 4
R1304X	A11368-10011	1.KOHM .1W 1% CHIP 0805	O 10
R1305	A11368-10021	10K 1/10W 1% SMD 0805 T/R	P 4
R1305X	A11368-10021	10K 1/10W 1% SMD 0805 T/R	P 10
R1306	A11368-10021	10K 1/10W 1% SMD 0805 T/R	O 4
R1306X	A11368-10021	10K 1/10W 1% SMD 0805 T/R	O 10
R1307	A11368-80611	8.06K OHM 1% 0.1W 0805 T/R	P 5
R1307X	A11368-80611	8.06K OHM 1% 0.1W 0805 T/R	P 10
R1308	A11368-47511	4.75KOHM 0.10W 1% CHIP 0805	O 2
R1308X	A11368-47511	4.75KOHM 0.10W 1% CHIP 0805	O 8
R1309	A11368-10021	10K 1/10W 1% SMD 0805 T/R	O 1
R1309X	A11368-10021	10K 1/10W 1% SMD 0805 T/R	O 7
R1310	A11368-10011	1.KOHM .1W 1% CHIP 0805	P 1
R1310X	A11368-10011	1.KOHM .1W 1% CHIP 0805	P 7
R1311	A11368-10021	10K 1/10W 1% SMD 0805 T/R	P 1
R1311X	A11368-10021	10K 1/10W 1% SMD 0805 T/R	P 7

R1312	A11368-10011	1.KOHM .1W 1% CHIP 0805	O 1
R1312X	A11368-10011	1.KOHM .1W 1% CHIP 0805	O 7
R1313	A11368-10021	10K 1/10W 1% SMD 0805 T/R	P 1
R1313X	A11368-10021	10K 1/10W 1% SMD 0805 T/R	P 7
R1314	A11368-10021	10K 1/10W 1% SMD 0805 T/R	O 2
R1314X	A11368-10021	10K 1/10W 1% SMD 0805 T/R	O 7
R1315	A11368-80611	8.06K OHM 1% 0.1W 0805 T/R	P 2
R1315X	A11368-80611	8.06K OHM 1% 0.1W 0805 T/R	P 8
R1316	A11368-10011	1.KOHM .1W 1% CHIP 0805	O 3
R1316X	A11368-10011	1.KOHM .1W 1% CHIP 0805	O 8
R1317	A11368-10031	100.KOHM .1W 1% CHIP 0805	O 3
R1317X	A11368-10031	100.KOHM .1W 1% CHIP 0805	O 8
R1318	A11368-10001	100 OHM 1% 0805 RES T/R	O 3
R1318X	A11368-10001	100 OHM 1% 0805 RES T/R	O 8
R1319	A11371-3005	30 OHM 1W 5% 2512 T/R	P 3
R1319X	A11371-3005	30 OHM 1W 5% 2512 T/R	P 8
R1320	A11368-1R001	1 OHM .1W 1% 0805 T/R	P 3
R1320X	A11368-1R001	1 OHM .1W 1% 0805 T/R	P 8
R1321	A11371-3005	30 OHM 1W 5% 2512 T/R	P 3
R1321X	A11371-3005	30 OHM 1W 5% 2512 T/R	P 9
R1322	A11368-10001	100 OHM 1% 0805 RES T/R	O 3
R1322X	A11368-10001	100 OHM 1% 0805 RES T/R	O 9
R1323	A11368-10031	100.KOHM .1W 1% CHIP 0805	O 3
R1323X	A11368-10031	100.KOHM .1W 1% CHIP 0805	O 9
R1324	A11368-10011	1.KOHM .1W 1% CHIP 0805	O 3
R1324X	A11368-10011	1.KOHM .1W 1% CHIP 0805	O 9
RN1	131667-1	NETWORK, PREC HI VOLT DIVIDER	C 4
RT21	127518-3	NTC, 20K J 10% #8 RING	A 11
RT21X	103415-10605	SCR, #6-32X.312 THD ROLL	A 10
RT22	127518-3	NTC, 20K J 10% #8 RING	A 11
RT22X	103415-10605	SCR, #6-32X.312 THD ROLL	A 8
RT23	101103-1	PTC, 6.0 OHM 265V	B 11
RT23X	C 8982-8	TO-220 XSISTOR HOLDER, PLASTIC	B 11
RT24	101103-1	PTC, 6.0 OHM 265V	A 11
RT24X	C 8982-8	TO-220 XSISTOR HOLDER, PLASTIC	A 11
T1	136934-2	FLY BACK XFMR, EMI NEMESIS	E 5
T21	136938-1	XFMR, PS MAIN I-TECH 3000	J 10
T1300	136722-1	GATE DR XFMR, PS GATE DRIVE	O 5
T1300X	136722-1	GATE DR XFMR, PS GATE DRIVE	O 11
TP1	127064-1	TEST POINT, SMT 1206	F 5
TP3	127064-1	TEST POINT, SMT 1206	D 6
TP4	127064-1	TEST POINT, SMT 1206	E 5
TP22	127064-1	TEST POINT, SMT 1206	A 7
TP23	127064-1	TEST POINT, SMT 1206	I 7
TP101	127064-1	TEST POINT, SMT 1206	J 5
TP102	127064-1	TEST POINT, SMT 1206	J 5
TP103	127064-1	TEST POINT, SMT 1206	I 6
TP104	127064-1	TEST POINT, SMT 1206	H 6
TP105	127064-1	TEST POINT, SMT 1206	L 5
TP106	127064-1	TEST POINT, SMT 1206	L 6
TP109	127064-1	TEST POINT, SMT 1206	G 6

TP110	127064-1	TEST POINT, SMT 1206	H 5
TP111	127064-1	TEST POINT, SMT 1206	M 4
TP112	127064-1	TEST POINT, SMT 1206	M 5
TP113	127064-1	TEST POINT, SMT 1206	I 5
TP116	127064-1	TEST POINT, SMT 1206	M 6
TP117	127064-1	TEST POINT, SMT 1206	M 6
TP1300	127064-1	TEST POINT, SMT 1206	O 4
TP1300X	127064-1	TEST POINT, SMT 1206	O 9
TP1301	127064-1	TEST POINT, SMT 1206	P 4
TP1301X	127064-1	TEST POINT, SMT 1206	P 10
TP1302	127064-1	TEST POINT, SMT 1206	P 4
TP1302X	127064-1	TEST POINT, SMT 1206	P 9
TP1303	127064-1	TEST POINT, SMT 1206	O 4
TP1303X	127064-1	TEST POINT, SMT 1206	O 10
TP1304	127064-1	TEST POINT, SMT 1206	P 5
TP1304X	127064-1	TEST POINT, SMT 1206	P 10
TP1305	127064-1	TEST POINT, SMT 1206	P 4
TP1305X	127064-1	TEST POINT, SMT 1206	P 10
TP1306	127064-1	TEST POINT, SMT 1206	O 1
TP1306X	127064-1	TEST POINT, SMT 1206	O 7
TP1307	127064-1	TEST POINT, SMT 1206	P 2
TP1307X	127064-1	TEST POINT, SMT 1206	P 7
TP1308	127064-1	TEST POINT, SMT 1206	P 1
TP1308X	127064-1	TEST POINT, SMT 1206	P 7
TP1309	127064-1	TEST POINT, SMT 1206	O 2
TP1309X	127064-1	TEST POINT, SMT 1206	O 7
TP1310	127064-1	TEST POINT, SMT 1206	P 2
TP1310X	127064-1	TEST POINT, SMT 1206	P 8
TP1311	127064-1	TEST POINT, SMT 1206	P 2
TP1311X	127064-1	TEST POINT, SMT 1206	P 7
U1	136841-1	IC, SMPS CTRL VIPER100SP SMD	D 5
U101	C 9012-3	OP AMP, QUAD LO NOISE MC33079D	J 5
U102	C 9012-3	OP AMP, QUAD LO NOISE MC33079D	K 5
U103	C 9038-8	COMPARATOR, QUAD LM339D SO-14	K 5
U104	136721-1	IC,LM319M HISPD DUAL COMPARTOR	I 6
U105	136840-1	IC, CONTROLLER SG3525AP PWM	H 5
U106	C 9038-8	COMPARATOR, QUAD LM339D SO-14	L 5
U107	C 9012-3	OP AMP, QUAD LO NOISE MC33079D	L 5
U108	C 9012-3	OP AMP, QUAD LO NOISE MC33079D	I 5
U109	126540-1	IC,QUAD 2 INPUT NOR GATE SO-14	H 5
U110	136648-1	IC, CD74HC4059 DIV-BY-N COUNTR	H 5
U111	C10344-7	74HC74AD DUAL D FLIP FLOP SOIC	H 4
U112	C 9898-5	78L05ACM 5V 5%RES SO-8 SMT	H 6
U113	102484-1	REG +15V D2PAK 2.25W	N 5
U114	102485-1	REG -15V D2PAK 2.25W	N 6
U115	137565-1	IC, AD633 ANALOG MULTIPLIER	I 5
U116	C 8262-5	MC33078D LOW NOISE DUAL OP AMP	L 5
U1300	136729-1	IC, CMOS QUAD NOR GATE SOIC	P 4
U1300X	136729-1	IC, CMOS QUAD NOR GATE SOIC	P 10
U1301	136728-1	IC, DUAL 4A GATE DRIVER	O 5
U1301X	136728-1	IC, DUAL 4A GATE DRIVER	O 10

U1302	136728-1	IC, DUAL 4A GATE DRIVER	O 4
U1302X	136728-1	IC, DUAL 4A GATE DRIVER	O 10
U1303	136728-1	IC, DUAL 4A GATE DRIVER	O 4
U1303X	136728-1	IC, DUAL 4A GATE DRIVER	O 10
U1304	136729-1	IC, CMOS QUAD NOR GATE SOIC	P 2
U1304X	136729-1	IC, CMOS QUAD NOR GATE SOIC	P 8
U1305	136728-1	IC, DUAL 4A GATE DRIVER	O 2
U1305X	136728-1	IC, DUAL 4A GATE DRIVER	O 8
U1306	136728-1	IC, DUAL 4A GATE DRIVER	O 2
U1306X	136728-1	IC, DUAL 4A GATE DRIVER	O 7
U1307	136728-1	IC, DUAL 4A GATE DRIVER	O 1
U1307X	136728-1	IC, DUAL 4A GATE DRIVER	O 7
W21	137125-2	WIRE, 14GA BRN 5.75" LINE	G 7
W22	137125-2	WIRE, 14GA BRN 5.75" LINE	H 7
W23	137122-2	WIRE, 14GA BLU 4.25" NTRL	H 7
W24	137122-2	WIRE, 14GA BLU 4.25" NTRL	H 7
WP1	137127-1	WIRE, 12GA BRN 2.75" LINE	A 4
WP2	137127-1	WIRE, 12GA BRN 2.75" LINE	A 5
WP3	137129-2	WIRE, 12GA BRN LINE	A 4
WP4	137124-2	WIRE, 12GA BLU NTRL	A 1

REVISION HISTORY						
E.C.N	REV	DESCRIPTION	DATE	DWN	PE	CM
	A	RELEASED FOR PRODUCTION DERIVED FROM 136541-13 REV B WITH CHANGES. Delete Silpad 133848-2 add Silpad 140090-1, Removed 0.01uF WIMA Caps 131312-1 from locations C1066, C1067, C1068, C1069, C1070, C1071, C1072, C1073, C1080, C1081, C1082, C1083, C1084, C1085, C1086, C1087, C1108, C1109, C1110, C1111, C1112, C1113, C1114, C1115, C1122, C1123, C1124, C1125, C1126, C1127, C1128, C1129 ADD 0.1uF TDK 630V Cap 140049-1 to the following locations C1066, C1069, C1072, C1073, C1081, C1082, C1086, C1087, C1110, C1111, C1113, C1114, C1123, C1124, C1126, C1129 REMOVE TESTPOINTS (127064-1) FROM LOCATIONS TP301, TP302, TP306, TP307, TP500, TP500X, TP501, TP501X, TP503, TP503X, TP504, TP504X, TP505, TP505X, TP507, TP507X, TP801, TP803, TP806, TP811, TP812, TP815, TP816, TP817, TP818, TP819, TP820, TP821, TP824-TP833, TP842, TP844, TP845, TP849, TP853, TP1000, TP1006, TP1013	07/06/07	JFL	BWP	KZ

UNLESS OTHERWISE SPECIFIED, THIS PRINTED WIRING ASSEMBLY SHALL MEET THE SPECIFICATION DESCRIBED IN IPC-A-610C CLASS 2 STANDARDS.

NOTES:
1. PRINTED WIRING BOARD PART NUMBER 136540-9.
2. SEE 137075-15_A.TIF FOR SCHEMATIC AND BOARD MAP
3. ALL LEADS SHALL BE TRIMMED TO 0.093" OR LESS.
   NO LEAD TRIM REQUIRED FOR 1200UF CAPACITORS (131310-2)
4. POSITION COMPONENTS AS SHOWN ON COMPONENT MAP.
5. THE PRINTED WIRING ASSEMBLY PART NUMBER FOR THIS ASSEMBLY SHALL BE MARKED ON THE PRINTED WIRING BOARD AND SHALL BE PERMANENT.
6. REMOVE SOLDER OR PREVENT SOLDER FROM ACCUMULATING IN PRINTED WIRING BOARD MOUNTING HOLES.
7. AFTER INSTALLING SUPPLIED BINDING POST HARDWARE, TIGHTEN THE NUT TO 13 IN-LBS.

PWA BOARD IDENTIFIER AND DESCRIPTION		REF. DES. RANGE
A	BCA MAIN	1000-1199
B	AMPLIFIER GATE DRIVE CHANNEL 1	500-599
C	AMPLIFIER GATE DRIVE CHANNEL 2	500X-599X
D	OUTPUT FILTER/ OUTPUT CONNECTOR	300-399
E	INPUT	800-899, 900-999, 1200-ON
F	POWER SUPPLY GATE DRIVE CHANNEL 1	MOVED TO PANEL 3
G	POWER SUPPLY GATE DRIVE CHANNEL 2	MOVED TO PANEL 3
H	USP3T XLR	260-270, J11, J2-3, P2-3, S2

CAUTION

STATIC CAN DAMAGE COMPONENTS!

DO NOT HANDLE

UNLESS WRIST STRAP IS WORN

UNCONTROLLED
UNLESS OTHERWISE MARKED IN RED INK BY CM AS A CONTROLLED COPY, COPIES OF THESE DOCUMENTS INCLUDING ASSOCIATED ELECTRONIC REPRODUCTIONS ARE FOR REFERENCE ONLY

THESE DRAWINGS AND SPECIFICATIONS ARE THE PROPERTY OF CROWN INTERNATIONAL, INC. AND SHALL NOT BE REPRODUCED, COPIED, OR USED AS THE BASIS FOR THE MANUFACTURE OR SALE OF APPARATUS OR DEVICES WITHOUT PERMISSION.

DWN	JFL	07/06/07	PE	BWP	07/06/07	CM	KZ	08/27/07		DIST.	K		

REF. DES.	CPN	DESCRIPTION	MAP LOC.
BB301	137437-1	BUSBAR, NMS BCA LEFT	N 9
BB302	137438-1	BUSBAR, NMS BCA RIGHT	M 9
BB401	137437-1	BUSBAR, NMS BCA LEFT	H 9
BB402	137438-1	BUSBAR, NMS BCA RIGHT	G 9
C260	A11369-152J2	1500PF 50V 5% NPO MLC 0805 T/R	D 14
C261	A11369-221J1	CAP, 220PF 50V 5% NPO 0603 T/R	D 14
C262	A11369-152J2	1500PF 50V 5% NPO MLC 0805 T/R	D 14
C263	A11369-221J1	CAP, 220PF 50V 5% NPO 0603 T/R	D 14
C264	A11369-152J2	1500PF 50V 5% NPO MLC 0805 T/R	C 14
C265	A11369-221J1	CAP, 220PF 50V 5% NPO 0603 T/R	B 14
C266	A11369-152J2	1500PF 50V 5% NPO MLC 0805 T/R	A 14
C267	A11369-221J1	CAP, 220PF 50V 5% NPO 0603 T/R	A 14
C268	A11427-103K1	0.01UF 50V 10% X7R MLC 0603	C 15
C269	A11427-103K1	0.01UF 50V 10% X7R MLC 0603	C 15
C300	A11369-102J2	.001UF 50V 5% NPO MLC 0805 T/R	D 3
C301	A11369-101J2	100 PF 50V 5% NPO MLC 0805 T/R	D 3
C302	A11369-101J2	100 PF 50V 5% NPO MLC 0805 T/R	D 3
C303	C10208-4	100.UF 25V 20% RAD ELECT T/R	C 3
C304	C10208-4	100.UF 25V 20% RAD ELECT T/R	C 3
C305	A11369-221J5	220PF 50V 5% NPO 1206 SMD	C 3
C306	A11369-221J5	220PF 50V 5% NPO 1206 SMD	D 3
C307	A10434-104JD	.1UF 250V 5% MTL POLY FILM T/A	A 4
C308	A10434-104JD	.1UF 250V 5% MTL POLY FILM T/A	A 2
C309	A10434-473JD	.047UF 250VDC 5% MET POLY T/A	A 2
C310	A10434-473JD	.047UF 250VDC 5% MET POLY T/A	A 1
C311	A10434-333JD	.033UF 250V 5% MTL POLY FILM	B 3
C312	A10434-333JD	.033UF 250V 5% MTL POLY FILM	B 3
C313	A10434-333JD	.033UF 250V 5% MTL POLY FILM	B 3
C314	A10434-333JD	.033UF 250V 5% MTL POLY FILM	B 3
C315	A10434-333JD	.033UF 250V 5% MTL POLY FILM	B 3
C316	A10434-333JD	.033UF 250V 5% MTL POLY FILM	B 3
C317	A10434-103JD	.01UF 250V 5%MTL POLY FILM T/A	B 3
C318	A10434-333JD	.033UF 250V 5% MTL POLY FILM	B 3
C319	A10434-333JD	.033UF 250V 5% MTL POLY FILM	B 3
C320	A10434-333JD	.033UF 250V 5% MTL POLY FILM	B 3
C321	A10434-103JD	.01UF 250V 5%MTL POLY FILM T/A	B 3
C322	A10434-104JD	.1UF 250V 5% MTL POLY FILM T/A	A 7
C323	A11369-102J2	.001UF 50V 5% NPO MLC 0805 T/R	E 3
C324	A11369-101J2	100 PF 50V 5% NPO MLC 0805 T/R	E 3
C325	A11369-101J2	100 PF 50V 5% NPO MLC 0805 T/R	E 3
C326	C10208-4	100.UF 25V 20% RAD ELECT T/R	F 3
C327	C10208-4	100.UF 25V 20% RAD ELECT T/R	E 3
C328	A11369-221J5	220PF 50V 5% NPO 1206 SMD	E 3
C329	A11369-221J5	220PF 50V 5% NPO 1206 SMD	E 3
C330	A10434-104JD	.1UF 250V 5% MTL POLY FILM T/A	E 3
C331	A10434-104JD	.1UF 250V 5% MTL POLY FILM T/A	G 2
C332	A10434-473JD	.047UF 250VDC 5% MET POLY T/A	G 2
C333	A10434-473JD	.047UF 250VDC 5% MET POLY T/A	G 1
C334	A10434-333JD	.033UF 250V 5% MTL POLY FILM	G 3
C335	A10434-333JD	.033UF 250V 5% MTL POLY FILM	G 3
C336	A10434-333JD	.033UF 250V 5% MTL POLY FILM	G 3
C337	A10434-333JD	.033UF 250V 5% MTL POLY FILM	G 3
C338	A10434-333JD	.033UF 250V 5% MTL POLY FILM	G 3
C339	A10434-333JD	.033UF 250V 5% MTL POLY FILM	G 3
C340	A10434-103JD	.01UF 250V 5%MTL POLY FILM T/A	G 3
C341	A10434-333JD	.033UF 250V 5% MTL POLY FILM	F 3

C342	A10434-333JD	.033UF 250V 5% MTL POLY FILM	F 3
C343	A10434-333JD	.033UF 250V 5% MTL POLY FILM	F 3
C344	A10434-103JD	.01UF 250V 5%MTL POLY FILM T/A	F 3
C345	A10434-104JD	.1UF 250V 5% MTL POLY FILM T/A	D 7
C346	103418-103J2	.01UF 5% 100V X7R 0805	B 7
C347	103418-103J2	.01UF 5% 100V X7R 0805	B 7
C348	103418-103J2	.01UF 5% 100V X7R 0805	C 7
C349	103418-103J2	.01UF 5% 100V X7R 0805	C 7
C350	A11427-104K2	.1UF 50V CHIP CAP 10% 0805 X7R	D 4
C351	A11427-104K2	.1UF 50V CHIP CAP 10% 0805 X7R	D 4
C352	C10208-4	100.UF 25V 20% RAD ELECT T/R	C 4
C353	C10208-4	100.UF 25V 20% RAD ELECT T/R	E 4
C354	A11427-104K2	.1UF 50V CHIP CAP 10% 0805 X7R	C 4
C355	A11427-104K2	.1UF 50V CHIP CAP 10% 0805 X7R	E 4
C356	135224-1	.001UF 10% 500V X7R MLC 1206	C 10
C357	A10434-333JD	.033UF 250V 5% MTL POLY FILM	C 10
C358	138506-1	PRP, C2288-6 .001UF DISC RAD	B 9
C359	A10434-333JD	.033UF 250V 5% MTL POLY FILM	C 9
C360	135224-1	.001UF 10% 500V X7R MLC 1206	D 9
C361	A10434-333JD	.033UF 250V 5% MTL POLY FILM	B 10
C362	135224-1	.001UF 10% 500V X7R MLC 1206	C 10
C363	A10434-333JD	.033UF 250V 5% MTL POLY FILM	B 9
C364	135224-1	.001UF 10% 500V X7R MLC 1206	C 10
C365	A10434-333JD	.033UF 250V 5% MTL POLY FILM	C 9
C366	138506-1	PRP, C2288-6 .001UF DISC RAD	B 9
C367	A10434-333JD	.033UF 250V 5% MTL POLY FILM	B 9
C368	A10434-333JD	.033UF 250V 5% MTL POLY FILM	C 11
C369	135224-1	.001UF 10% 500V X7R MLC 1206	C 10
C370	A10434-333JD	.033UF 250V 5% MTL POLY FILM	C 11
C371	135224-1	.001UF 10% 500V X7R MLC 1206	C 11
C372	A10434-333JD	.033UF 250V 5% MTL POLY FILM	B 11
C373	135224-1	.001UF 10% 500V X7R MLC 1206	C 10
C374	A10434-333JD	.033UF 250V 5% MTL POLY FILM	B 11
C375	138506-1	PRP, C2288-6 .001UF DISC RAD	B 11
C376	A10434-333JD	.033UF 250V 5% MTL POLY FILM	B 11
C377	138506-1	PRP, C2288-6 .001UF DISC RAD	B 11
C378	A10434-333JD	.033UF 250V 5% MTL POLY FILM	C 11
C379	135224-1	.001UF 10% 500V X7R MLC 1206	D 11
C380		OPEN	D 10
C381		OPEN	C 11
C382	102438-221K2	220PF 200V 10% NPO 0805 T/R	D 4
C383	102438-221K2	220PF 200V 10% NPO 0805 T/R	D 4
C500	A11369-680J2	CAP, 68PF 5% 50V SMT 0805	H 7
C500X	A11369-680J2	CAP, 68PF 5% 50V SMT 0805	N 7
C501		OPEN	H 7
C501X		OPEN	N 7
C502		OPEN	H 8
C502X		OPEN	N 8
C503		OPEN	H 7
C503X		OPEN	N 7
C504		OPEN	H 8
C504X		OPEN	N 8
C505		OPEN	I 8
C505X		OPEN	O 8
C506		OPEN	I 8
C506X		OPEN	O 8
C507		OPEN	I 7
C507X		OPEN	O 7
C508	A11427-104K2	.1UF 50V CHIP CAP 10% 0805 X7R	I 7

C508X	A11427-104K2	.1UF 50V CHIP CAP 10% 0805 X7R	O 7
C509	A11427-104K2	.1UF 50V CHIP CAP 10% 0805 X7R	I 6
C509X	A11427-104K2	.1UF 50V CHIP CAP 10% 0805 X7R	O 6
C510	A11427-104K2	.1UF 50V CHIP CAP 10% 0805 X7R	J 7
C510X	A11427-104K2	.1UF 50V CHIP CAP 10% 0805 X7R	P 7
C511	A11427-104K2	.1UF 50V CHIP CAP 10% 0805 X7R	I 7
C511X	A11427-104K2	.1UF 50V CHIP CAP 10% 0805 X7R	P 7
C512	A11427-104K2	.1UF 50V CHIP CAP 10% 0805 X7R	H 7
C512X	A11427-104K2	.1UF 50V CHIP CAP 10% 0805 X7R	N 7
C513	A11427-104K2	.1UF 50V CHIP CAP 10% 0805 X7R	H 7
C513X	A11427-104K2	.1UF 50V CHIP CAP 10% 0805 X7R	N 7
C514	A11369-680J2	CAP, 68PF 5% 50V SMT 0805	G 7
C514X	A11369-680J2	CAP, 68PF 5% 50V SMT 0805	M 7
C515		OPEN	G 7
C515X		OPEN	M 7
C516		OPEN	G 7
C516X		OPEN	M 7
C517		OPEN	G 7
C517X		OPEN	M 7
C518		OPEN	F 7
C518X		OPEN	L 7
C519		OPEN	F 7
C519X		OPEN	L 7
C520		OPEN	F 7
C520X		OPEN	L 7
C521		OPEN	E 7
C521X		OPEN	K 7
C522		OPEN	F 7
C522X		OPEN	L 7
C523	A11427-104K2	.1UF 50V CHIP CAP 10% 0805 X7R	F 7
C523X	A11427-104K2	.1UF 50V CHIP CAP 10% 0805 X7R	L 7
C524	A11427-104K2	.1UF 50V CHIP CAP 10% 0805 X7R	F 6
C524X	A11427-104K2	.1UF 50V CHIP CAP 10% 0805 X7R	L 6
C525	A11427-104K2	.1UF 50V CHIP CAP 10% 0805 X7R	F 7
C525X	A11427-104K2	.1UF 50V CHIP CAP 10% 0805 X7R	L 7
C526	131312-1	0.01UF 400V 5% MET POLY RAD	E 7
C526X	131312-1	0.01UF 400V 5% MET POLY RAD	K 7
C527	131312-1	0.01UF 400V 5% MET POLY RAD	E 7
C527X	131312-1	0.01UF 400V 5% MET POLY RAD	K 7
C528	A11427-104K2	.1UF 50V CHIP CAP 10% 0805 X7R	G 7
C528X	A11427-104K2	.1UF 50V CHIP CAP 10% 0805 X7R	M 7
C529	A11427-104K2	.1UF 50V CHIP CAP 10% 0805 X7R	F 7
C529X	A11427-104K2	.1UF 50V CHIP CAP 10% 0805 X7R	L 7
C530	A11427-104K2	.1UF 50V CHIP CAP 10% 0805 X7R	E 7
C530X	A11427-104K2	.1UF 50V CHIP CAP 10% 0805 X7R	K 7
C531	A11427-104K2	.1UF 50V CHIP CAP 10% 0805 X7R	E 7
C531X	A11427-104K2	.1UF 50V CHIP CAP 10% 0805 X7R	K 7
C532	125508-1	10UF 50V 20% SMT AL ELECT T/R	F 7
C532X	125508-1	10UF 50V 20% SMT AL ELECT T/R	L 7
C533	A11369-680J2	CAP, 68PF 5% 50V SMT 0805	H 7
C533X	A11369-680J2	CAP, 68PF 5% 50V SMT 0805	N 7
C534	A11369-680J2	CAP, 68PF 5% 50V SMT 0805	G 7
C534X	A11369-680J2	CAP, 68PF 5% 50V SMT 0805	M 7
C800	137422-1	CAP, 0.01UF 25V 5% NPO 1206	K 5
C801	137422-1	CAP, 0.01UF 25V 5% NPO 1206	K 4
C802	A11427-103K1	0.01UF 50V 10% X7R MLC 0603	L 2
C803	A11427-103K1	0.01UF 50V 10% X7R MLC 0603	K 2
C805	A11369-101J2	100 PF 50V 5% NPO MLC 0805 T/R	K 5
C806	A11369-101J2	100 PF 50V 5% NPO MLC 0805 T/R	K 4

C811	C10466-8	.22UF 50V 5% MTL FILM RDL T/A	L 4
C815	131788-1	CAP, 0.68UF 50V 5% METAL FILM	K 4
C816	135505-1	CAP, 0.1UF 25V 10% X7R 0603	K 4
C817	135505-1	CAP, 0.1UF 25V 10% X7R 0603	K 3
C818	131788-1	CAP, 0.68UF 50V 5% METAL FILM	K 4
C819	135505-1	CAP, 0.1UF 25V 10% X7R 0603	K 3
C820	A11369-332F5	3300.PF 50V 1% NPO MLC 1206	L 2
C821	A11369-221J2	220 PF 50V 5% NPO MLC 0805 T/R	L 3
C822	A11369-221J2	220 PF 50V 5% NPO MLC 0805 T/R	L 3
C823	A11369-102J2	.001UF 50V 5% NPO MLC 0805 T/R	L 3
C824	A11369-221J2	220 PF 50V 5% NPO MLC 0805 T/R	L 3
C825	A11427-103K1	0.01UF 50V 10% X7R MLC 0603	L 3
C826	A11369-332F5	3300.PF 50V 1% NPO MLC 1206	L 3
C827	A11427-472K1	4700PF 50V 10% X7R 0603 T/R	L 3
C828	A11427-103K1	0.01UF 50V 10% X7R MLC 0603	I 5
C829	C 9465-3	10UF 50V 20% VERT ELECT T/A	I 5
C830	A11369-470K1	CAP, 47PF 50V 10% NPO 0603 T/R	I 5
C831	A11369-102J2	.001UF 50V 5% NPO MLC 0805 T/R	I 4
C832	135505-1	CAP, 0.1UF 25V 10% X7R 0603	I 5
C833	126551-1	100UF 25V ELCAP SMD	I 5
C834	A11427-223J2	.022UF 50V 5% X7R 0805 T/R	L 4
C835	A11427-223J2	.022UF 50V 5% X7R 0805 T/R	K 4
C836	137422-1	CAP, 0.01UF 25V 5% NPO 1206	K 5
C837	137422-1	CAP, 0.01UF 25V 5% NPO 1206	K 4
C838	A11427-223J2	.022UF 50V 5% X7R 0805 T/R	K 4
C839	A11427-223J2	.022UF 50V 5% X7R 0805 T/R	K 4
C840	A11427-223J2	.022UF 50V 5% X7R 0805 T/R	K 3
C841	A11369-101J2	100 PF 50V 5% NPO MLC 0805 T/R	K 5
C842	A11369-101J2	100 PF 50V 5% NPO MLC 0805 T/R	K 4
C843	A11427-223J2	.022UF 50V 5% X7R 0805 T/R	K 3
C844	135505-1	CAP, 0.1UF 25V 10% X7R 0603	L 4
C845	135505-1	CAP, 0.1UF 25V 10% X7R 0603	L 5
C846	C10466-8	.22UF 50V 5% MTL FILM RDL T/A	K 4
C849	131788-1	CAP, 0.68UF 50V 5% METAL FILM	K 3
C850	135505-1	CAP, 0.1UF 25V 10% X7R 0603	K 3
C851	135505-1	CAP, 0.1UF 25V 10% X7R 0603	K 2
C852	131788-1	CAP, 0.68UF 50V 5% METAL FILM	K 3
C853	135505-1	CAP, 0.1UF 25V 10% X7R 0603	K 3
C854	A11369-332F5	3300.PF 50V 1% NPO MLC 1206	J 2
C855	A11369-221J2	220 PF 50V 5% NPO MLC 0805 T/R	J 3
C856	A11369-221J2	220 PF 50V 5% NPO MLC 0805 T/R	J 3
C857	A11369-221J2	220 PF 50V 5% NPO MLC 0805 T/R	K 3
C858	A11369-102J2	.001UF 50V 5% NPO MLC 0805 T/R	J 3
C859	A11369-332F5	3300.PF 50V 1% NPO MLC 1206	J 3
C860	A11427-472K1	4700PF 50V 10% X7R 0603 T/R	J 3
C861	A11427-103K1	0.01UF 50V 10% X7R MLC 0603	H 5
C862	C 9465-3	10UF 50V 20% VERT ELECT T/A	H 5
C863	A11369-470K1	CAP, 47PF 50V 10% NPO 0603 T/R	H 5
C864	A11369-102J2	.001UF 50V 5% NPO MLC 0805 T/R	H 4
C865	135505-1	CAP, 0.1UF 25V 10% X7R 0603	H 5
C866	126551-1	100UF 25V ELCAP SMD	J 5
C869	130615-1	CAP, 1UF 16V X7R 10% 1206 SMT	I 3
C870	130615-1	CAP, 1UF 16V X7R 10% 1206 SMT	I 3
C871	130615-1	CAP, 1UF 16V X7R 10% 1206 SMT	I 3
C872	130615-1	CAP, 1UF 16V X7R 10% 1206 SMT	H 3
C873	130615-1	CAP, 1UF 16V X7R 10% 1206 SMT	I 3
C876	135505-1	CAP, 0.1UF 25V 10% X7R 0603	H 2
C877	135505-1	CAP, 0.1UF 25V 10% X7R 0603	I 2
C878	135505-1	CAP, 0.1UF 25V 10% X7R 0603	H 3

C879	135505-1	CAP, 0.1UF 25V 10% X7R 0603	H 2
C880	135505-1	CAP, 0.1UF 25V 10% X7R 0603	I 2
C881	135505-1	CAP, 0.1UF 25V 10% X7R 0603	H 2
C882	135505-1	CAP, 0.1UF 25V 10% X7R 0603	H 2
C891	A11369-470K1	CAP, 47PF 50V 10% NPO 0603 T/R	J 4
C892	A11369-470K1	CAP, 47PF 50V 10% NPO 0603 T/R	I 4
C893	A11427-103K1	0.01UF 50V 10% X7R MLC 0603	L 1
C894	A11427-103K1	0.01UF 50V 10% X7R MLC 0603	I 1
C895	A11427-104K2	.1UF 50V CHIP CAP 10% 0805 X7R	L 4
C896	A11427-104K2	.1UF 50V CHIP CAP 10% 0805 X7R	L 5
C897	126551-1	100UF 25V ELCAP SMD	L 4
C898	126551-1	100UF 25V ELCAP SMD	L 5
C899	135505-1	CAP, 0.1UF 25V 10% X7R 0603	J 5
C900	135505-1	CAP, 0.1UF 25V 10% X7R 0603	L 3
C901	135505-1	CAP, 0.1UF 25V 10% X7R 0603	L 3
C902	135505-1	CAP, 0.1UF 25V 10% X7R 0603	J 3
C903	135505-1	CAP, 0.1UF 25V 10% X7R 0603	K 3
C904	135505-1	CAP, 0.1UF 25V 10% X7R 0603	H 4
C906	135505-1	CAP, 0.1UF 25V 10% X7R 0603	K 5
C907	135505-1	CAP, 0.1UF 25V 10% X7R 0603	K 4
C908	135505-1	CAP, 0.1UF 25V 10% X7R 0603	I 5
C909	135505-1	CAP, 0.1UF 25V 10% X7R 0603	I 5
C910	135505-1	CAP, 0.1UF 25V 10% X7R 0603	L 2
C911	135505-1	CAP, 0.1UF 25V 10% X7R 0603	L 3
C914	135505-1	CAP, 0.1UF 25V 10% X7R 0603	I 5
C915	135505-1	CAP, 0.1UF 25V 10% X7R 0603	I 5
C917	135505-1	CAP, 0.1UF 25V 10% X7R 0603	K 3
C918	135505-1	CAP, 0.1UF 25V 10% X7R 0603	K 3
C921	135505-1	CAP, 0.1UF 25V 10% X7R 0603	J 5
C922	135505-1	CAP, 0.1UF 25V 10% X7R 0603	H 5
C923	135505-1	CAP, 0.1UF 25V 10% X7R 0603	H 5
C924	135505-1	CAP, 0.1UF 25V 10% X7R 0603	H 5
C925	135505-1	CAP, 0.1UF 25V 10% X7R 0603	H 5
C926	135505-1	CAP, 0.1UF 25V 10% X7R 0603	J 2
C927	135505-1	CAP, 0.1UF 25V 10% X7R 0603	K 3
C928	A11427-103K1	0.01UF 50V 10% X7R MLC 0603	K 5
C931	135505-1	CAP, 0.1UF 25V 10% X7R 0603	J 1
C932	135505-1	CAP, 0.1UF 25V 10% X7R 0603	J 1
C934	135505-1	CAP, 0.1UF 25V 10% X7R 0603	I 4
C935	135505-1	CAP, 0.1UF 25V 10% X7R 0603	I 4
C936	A11427-103K1	0.01UF 50V 10% X7R MLC 0603	K 3
C937	135505-1	CAP, 0.1UF 25V 10% X7R 0603	J 2
C938	135505-1	CAP, 0.1UF 25V 10% X7R 0603	K 1
C939	135505-1	CAP, 0.1UF 25V 10% X7R 0603	J 1
C940	135505-1	CAP, 0.1UF 25V 10% X7R 0603	K 2
C941	135505-1	CAP, 0.1UF 25V 10% X7R 0603	J 2
C942	A11427-103K1	0.01UF 50V 10% X7R MLC 0603	I 2
C1000	A11427-104K2	.1UF 50V CHIP CAP 10% 0805 X7R	O 14
C1001	A11427-104K2	.1UF 50V CHIP CAP 10% 0805 X7R	O 14
C1002		OPEN	N 12
C1003		OPEN	N 12
C1004	133872-1	3900PF 5% 50V POLYESTER T/R	N 12
C1005	133873-1	8200PF 5% 50V POLYESTER T/R	N 12
C1006	A11369-100J2	CAP, 10PF 5% 50V SMT 0805	N 12
C1007	A11369-471J2	CAP, 470PF 5% 50V SMT 0805	N 12
C1008		OPEN	N 12
C1009		OPEN	N 12
C1010	A11369-101J2	100 PF 50V 5% NPO MLC 0805 T/R	M 12
C1011		OPEN	M 12

C1012	137171-1	15 PF 500V 5% DISC	O 9
C1013	133869-1	CAP, 150PF 5% 500V NPO RAD T/R	O 10
C1014	137171-1	15 PF 500V 5% DISC	K 9
C1015	133869-1	CAP, 150PF 5% 500V NPO RAD T/R	K 9
C1016	138791-1	150.UF 25V 20% RAD ELECT T/R	N 9
C1017	A11427-104K2	.1UF 50V CHIP CAP 10% 0805 X7R	N 9
C1018	A10434-473JD	.047UF 250VDC 5% MET POLY T/A	M 10
C1019	A10434-473JD	.047UF 250VDC 5% MET POLY T/A	K 10
C1020	138791-1	150.UF 25V 20% RAD ELECT T/R	L 9
C1021	A11427-104K2	.1UF 50V CHIP CAP 10% 0805 X7R	L 9
C1022	A11427-104K2	.1UF 50V CHIP CAP 10% 0805 X7R	N 14
C1023	A11427-104K2	.1UF 50V CHIP CAP 10% 0805 X7R	N 14
C1024		OPEN	J 12
C1025		OPEN	J 12
C1026	133872-1	3900PF 5% 50V POLYESTER T/R	J 12
C1027	133873-1	8200PF 5% 50V POLYESTER T/R	J 12
C1028	A11369-100J2	CAP, 10PF 5% 50V SMT 0805	I 12
C1029	A11369-471J2	CAP, 470PF 5% 50V SMT 0805	J 12
C1030		OPEN	J 12
C1031		OPEN	J 12
C1032	A11369-101J2	100 PF 50V 5% NPO MLC 0805 T/R	I 12
C1033		OPEN	I 12
C1034	137171-1	15 PF 500V 5% DISC	J 10
C1035	133869-1	CAP, 150PF 5% 500V NPO RAD T/R	I 9
C1036	137171-1	15 PF 500V 5% DISC	E 10
C1037	133869-1	CAP, 150PF 5% 500V NPO RAD T/R	E 10
C1038	138791-1	150.UF 25V 20% RAD ELECT T/R	H 9
C1039	A11427-104K2	.1UF 50V CHIP CAP 10% 0805 X7R	H 9
C1040	A10434-473JD	.047UF 250VDC 5% MET POLY T/A	J 10
C1041	A10434-473JD	.047UF 250VDC 5% MET POLY T/A	H 10
C1042	138791-1	150.UF 25V 20% RAD ELECT T/R	F 9
C1043	A11427-104K2	.1UF 50V CHIP CAP 10% 0805 X7R	F 9
C1044	A11427-104K2	.1UF 50V CHIP CAP 10% 0805 X7R	G 13
C1045	A11427-104K2	.1UF 50V CHIP CAP 10% 0805 X7R	G 12
C1047	A11427-334J6	.33UF 50V 5% CHIP X7R 1210	F 13
C1048	103418-103K2	.01MF 100V 10% X7R 0805 SMD	I 12
C1049	C 5362-6	2.2UF 50V VERT ELECT T/A	I 12
C1050	A11369-102J2	.001UF 50V 5% NPO MLC 0805 T/R	I 13
C1051		OPEN	H 13
C1052	A11427-334J6	.33UF 50V 5% CHIP X7R 1210	I 13
C1053	A11427-334J6	.33UF 50V 5% CHIP X7R 1210	H 13
C1054	A11427-334J6	.33UF 50V 5% CHIP X7R 1210	H 12
C1055		OPEN	O 14
C1056	C10208-4	100.UF 25V 20% RAD ELECT T/R	P 13
C1057	C10208-4	100.UF 25V 20% RAD ELECT T/R	O 13
C1058	C10208-4	100.UF 25V 20% RAD ELECT T/R	E 14
C1059	C10208-4	100.UF 25V 20% RAD ELECT T/R	E 14
C1060	A11427-104K2	.1UF 50V CHIP CAP 10% 0805 X7R	L 13
C1061	A11369-680J2	CAP, 68PF 5% 50V SMT 0805	L 12
C1062	A11369-680J2	CAP, 68PF 5% 50V SMT 0805	M 12
C1063	C10208-4	100.UF 25V 20% RAD ELECT T/R	N 13
C1064	C10208-4	100.UF 25V 20% RAD ELECT T/R	F 12
C1065	C10208-4	100.UF 25V 20% RAD ELECT T/R	F 12
C1066	140049-1	CAP, 0.1UF 630V 10% RAD CER	P 9
C1067		OPEN	P 9
C1068		OPEN	P 10
C1069	140049-1	CAP, 0.1UF 630V 10% RAD CER	O 9
C1070		OPEN	N 9
C1071		OPEN	N 9

C1072	140049-1	CAP, 0.1UF 630V 10% RAD CER	N 9
C1073	140049-1	CAP, 0.1UF 630V 10% RAD CER	N 9
C1074	125434-1	CAP,.068UF 400V FILM POLYESTER	M 10
C1075	125434-1	CAP,.068UF 400V FILM POLYESTER	K 10
C1076	125434-1	CAP,.068UF 400V FILM POLYESTER	N 10
C1077	125434-1	CAP,.068UF 400V FILM POLYESTER	O 10
C1078	125434-1	CAP,.068UF 400V FILM POLYESTER	O 10
C1079	125434-1	CAP,.068UF 400V FILM POLYESTER	P 10
C1080		OPEN	M 9
C1081	140049-1	CAP, 0.1UF 630V 10% RAD CER	M 9
C1082	140049-1	CAP, 0.1UF 630V 10% RAD CER	M 9
C1083		OPEN	M 9
C1084		OPEN	K 9
C1085		OPEN	K 9
C1086	140049-1	CAP, 0.1UF 630V 10% RAD CER	K 9
C1087	140049-1	CAP, 0.1UF 630V 10% RAD CER	J 9
C1088	131310-2	CAP,1200UF 200VDC PC MNT ELECT	O 11
C1089	131310-2	CAP,1200UF 200VDC PC MNT ELECT	P 12
C1090	131310-2	CAP,1200UF 200VDC PC MNT ELECT	O 12
C1091	131310-2	CAP,1200UF 200VDC PC MNT ELECT	N 11
C1092	131310-2	CAP,1200UF 200VDC PC MNT ELECT	M 11
C1093	131310-2	CAP,1200UF 200VDC PC MNT ELECT	N 12
C1094	131310-2	CAP,1200UF 200VDC PC MNT ELECT	M 12
C1095	131310-2	CAP,1200UF 200VDC PC MNT ELECT	L 11
C1096	131310-2	CAP,1200UF 200VDC PC MNT ELECT	K 11
C1097	131310-2	CAP,1200UF 200VDC PC MNT ELECT	K 12
C1098	131310-2	CAP,1200UF 200VDC PC MNT ELECT	J 11
C1099	131310-2	CAP,1200UF 200VDC PC MNT ELECT	J 12
C1100	131310-2	CAP,1200UF 200VDC PC MNT ELECT	I 12
C1101	131310-2	CAP,1200UF 200VDC PC MNT ELECT	I 11
C1102	131310-2	CAP,1200UF 200VDC PC MNT ELECT	H 11
C1103	131310-2	CAP,1200UF 200VDC PC MNT ELECT	H 12
C1104	131310-2	CAP,1200UF 200VDC PC MNT ELECT	G 12
C1105	131310-2	CAP,1200UF 200VDC PC MNT ELECT	G 11
C1106	131310-2	CAP,1200UF 200VDC PC MNT ELECT	F 11
C1107	131310-2	CAP,1200UF 200VDC PC MNT ELECT	F 12
C1108		OPEN	E 9
C1109		OPEN	E 9
C1110	140049-1	CAP, 0.1UF 630V 10% RAD CER	E 9
C1111	140049-1	CAP, 0.1UF 630V 10% RAD CER	E 9
C1112		OPEN	G 9
C1113	140049-1	CAP, 0.1UF 630V 10% RAD CER	G 9
C1114	140049-1	CAP, 0.1UF 630V 10% RAD CER	G 9
C1115		OPEN	G 9
C1116	125434-1	CAP,.068UF 400V FILM POLYESTER	E 10
C1117	125434-1	CAP,.068UF 400V FILM POLYESTER	F 10
C1118	125434-1	CAP,.068UF 400V FILM POLYESTER	J 10
C1119	125434-1	CAP,.068UF 400V FILM POLYESTER	H 10
C1120	125434-1	CAP,.068UF 400V FILM POLYESTER	F 10
C1121	125434-1	CAP,.068UF 400V FILM POLYESTER	F 10
C1122		OPEN	H 9
C1123	140049-1	CAP, 0.1UF 630V 10% RAD CER	H 9
C1124	140049-1	CAP, 0.1UF 630V 10% RAD CER	H 9
C1125		OPEN	H 9
C1126	140049-1	CAP, 0.1UF 630V 10% RAD CER	J 9
C1127		OPEN	J 9
C1128		OPEN	J 9
C1129	140049-1	CAP, 0.1UF 630V 10% RAD CER	J 9
C1130	A11427-104K2	.1UF 50V CHIP CAP 10% 0805 X7R	H 12

C1131	A11427-104K2	.1UF 50V CHIP CAP 10% 0805 X7R	H 13
C1132	A11427-104K2	.1UF 50V CHIP CAP 10% 0805 X7R	N 13
C1133	A11427-104K2	.1UF 50V CHIP CAP 10% 0805 X7R	N 14
C1134	A11427-104K2	.1UF 50V CHIP CAP 10% 0805 X7R	H 12
C1135	A11427-104K2	.1UF 50V CHIP CAP 10% 0805 X7R	H 13
C1136	A11427-104K2	.1UF 50V CHIP CAP 10% 0805 X7R	L 13
C1137	A11427-104J2	.1UF 50V 5% X7R 0805 T/R	E 13
C1138	A11427-104J2	.1UF 50V 5% X7R 0805 T/R	E 13
C1139	A11427-104J2	.1UF 50V 5% X7R 0805 T/R	E 13
C1140	A11427-104J2	.1UF 50V 5% X7R 0805 T/R	E 13
C1141		OPEN	E 13
C1142		OPEN	E 13
C1143		OPEN	E 13
C1144		OPEN	E 13
C1145		OPEN	E 12
C1146		OPEN	P 12
C1147	A11369-221J1	CAP, 220PF 50V 5% NPO 0603 T/R	L 12
C1148	A10434-474JA	CAP, 0.47 UF 5% 50V MET POLY T/A	G 13
D300	132558-1	DIODE, TL431ACD ADJ SMT REF	C 3
D301	133264-1	DIODE, 250V SWITCH MINIMELF	B 5
D302	132558-1	DIODE, TL431ACD ADJ SMT REF	E 3
D303	133264-1	DIODE, 250V SWITCH MINIMELF	D 3
D304	C 7478-8	1N4148 MINIMELF CHIP DIODE T/R	C 4
D305	C 7478-8	1N4148 MINIMELF CHIP DIODE T/R	E 4
D500	C10370-2	DIODE, ZENER 10V MMBZ5240BL	I 7
D500X	C10370-2	DIODE, ZENER 10V MMBZ5240BL	O 7
D501	125594-1	DIODE, RECTIFIER 400V 1A SMB	F 7
D501X	125594-1	DIODE, RECTIFIER 400V 1A SMB	L 7
D502	C 7478-8	1N4148 MINIMELF CHIP DIODE T/R	F 7
D502X	C 7478-8	1N4148 MINIMELF CHIP DIODE T/R	L 7
D503	C 7478-8	1N4148 MINIMELF CHIP DIODE T/R	E 7
D503X	C 7478-8	1N4148 MINIMELF CHIP DIODE T/R	K 7
D504	C 7478-8	1N4148 MINIMELF CHIP DIODE T/R	E 7
D504X	C 7478-8	1N4148 MINIMELF CHIP DIODE T/R	K 7
D505	C 7478-8	1N4148 MINIMELF CHIP DIODE T/R	E 7
D505X	C 7478-8	1N4148 MINIMELF CHIP DIODE T/R	K 7
D805	135343-1	DIODE, DUAL MMBD4148SE SOT-23	I 5
D806	135343-1	DIODE, DUAL MMBD4148SE SOT-23	I 5
D812	135343-1	DIODE, DUAL MMBD4148SE SOT-23	H 5
D813	135343-1	DIODE, DUAL MMBD4148SE SOT-23	H 5
D815	135343-1	DIODE, DUAL MMBD4148SE SOT-23	J 5
D816	135343-1	DIODE, DUAL MMBD4148SE SOT-23	J 5
D817	135343-1	DIODE, DUAL MMBD4148SE SOT-23	I 3
D818	135343-1	DIODE, DUAL MMBD4148SE SOT-23	I 3
D819	135343-1	DIODE, DUAL MMBD4148SE SOT-23	I 3
D820	135343-1	DIODE, DUAL MMBD4148SE SOT-23	H 3
D821	135343-1	DIODE, DUAL MMBD4148SE SOT-23	I 3
D822	135343-1	DIODE, DUAL MMBD4148SE SOT-23	L 2
D823	135343-1	DIODE, DUAL MMBD4148SE SOT-23	I 2
D824	135343-1	DIODE, DUAL MMBD4148SE SOT-23	H 4
D827	135343-1	DIODE, DUAL MMBD4148SE SOT-23	L 4
D828	135343-1	DIODE, DUAL MMBD4148SE SOT-23	L 5
D829	135343-1	DIODE, DUAL MMBD4148SE SOT-23	I 2
D1000	C 7478-8	1N4148 MINIMELF CHIP DIODE T/R	N 13
D1001	C 7478-8	1N4148 MINIMELF CHIP DIODE T/R	N 13
D1002	C 7478-8	1N4148 MINIMELF CHIP DIODE T/R	K 13
D1003	C 7478-8	1N4148 MINIMELF CHIP DIODE T/R	K 13
D1004	134347-1	FORMED, 134346-1 PAIR (R3060)	O 9
D1005	134347-1	FORMED, 134346-1 PAIR (R3060)	L 9

D1006	C 7478-8	1N4148 MINIMELF CHIP DIODE T/R	O 9
D1007	133264-1	DIODE, 250V SWITCH MINIMELF	O 10
D1008	133264-1	DIODE, 250V SWITCH MINIMELF	O 10
D1009	133264-1	DIODE, 250V SWITCH MINIMELF	O 10
D1010	133264-1	DIODE, 250V SWITCH MINIMELF	O 10
D1011	137162-1	DIODE, 2EZ6.2D5 RAD FRM 6.2V	O 9
D1012	137162-1	DIODE, 2EZ6.2D5 RAD FRM 6.2V	O 9
D1013	C 7478-8	1N4148 MINIMELF CHIP DIODE T/R	L 9
D1014	133264-1	DIODE, 250V SWITCH MINIMELF	K 10
D1015	133264-1	DIODE, 250V SWITCH MINIMELF	L 10
D1016	133264-1	DIODE, 250V SWITCH MINIMELF	K 10
D1017	133264-1	DIODE, 250V SWITCH MINIMELF	L 10
D1018	137162-1	DIODE, 2EZ6.2D5 RAD FRM 6.2V	L 9
D1019	137162-1	DIODE, 2EZ6.2D5 RAD FRM 6.2V	L 9
D1020	134347-1	FORMED, 134346-1 PAIR (R3060)	I 9
D1021	134347-1	FORMED, 134346-1 PAIR (R3060)	F 9
D1022	C 7478-8	1N4148 MINIMELF CHIP DIODE T/R	I 9
D1023	133264-1	DIODE, 250V SWITCH MINIMELF	I 10
D1024	133264-1	DIODE, 250V SWITCH MINIMELF	I 10
D1025	133264-1	DIODE, 250V SWITCH MINIMELF	I 10
D1026	133264-1	DIODE, 250V SWITCH MINIMELF	I 10
D1027	137162-1	DIODE, 2EZ6.2D5 RAD FRM 6.2V	I 9
D1028	137162-1	DIODE, 2EZ6.2D5 RAD FRM 6.2V	I 9
D1029	C 7478-8	1N4148 MINIMELF CHIP DIODE T/R	F 9
D1030	133264-1	DIODE, 250V SWITCH MINIMELF	F 10
D1031	133264-1	DIODE, 250V SWITCH MINIMELF	F 10
D1032	133264-1	DIODE, 250V SWITCH MINIMELF	F 10
D1033	133264-1	DIODE, 250V SWITCH MINIMELF	F 10
D1034	137162-1	DIODE, 2EZ6.2D5 RAD FRM 6.2V	F 9
D1035	137162-1	DIODE, 2EZ6.2D5 RAD FRM 6.2V	F 9
D1036	C 7478-8	1N4148 MINIMELF CHIP DIODE T/R	G 13
D1037	C 7478-8	1N4148 MINIMELF CHIP DIODE T/R	N 13
D1038	C 7478-8	1N4148 MINIMELF CHIP DIODE T/R	I 12
D1039	C 9929-8	TL431ACLP ADJ PREC RFNC T/A	I 13
D1040	C 7478-8	1N4148 MINIMELF CHIP DIODE T/R	H 13
D1041		OPEN	G 13
D1042		OPEN	G 13
D1043		OPEN	G 13
D1044	A11371-0R02	0. OHM .125W 5% CHIP RES T/R	G 13
D1045	C 7478-8	1N4148 MINIMELF CHIP DIODE T/R	O 14
E800	126473-1	LED, GRN SMT 1206	I 3
FB260	125846-1	FERRITE BEAD, 600 OHM .5A 0805	D 14
FB261	125846-1	FERRITE BEAD, 600 OHM .5A 0805	D 14
FB262	125846-1	FERRITE BEAD, 600 OHM .5A 0805	B 14
FB263	125846-1	FERRITE BEAD, 600 OHM .5A 0805	A 14
FB800	125846-1	FERRITE BEAD, 600 OHM .5A 0805	H 3
FB804	125846-1	FERRITE BEAD, 600 OHM .5A 0805	K 2
FB805	125846-1	FERRITE BEAD, 600 OHM .5A 0805	K 2
FB806	125846-1	FERRITE BEAD, 600 OHM .5A 0805	L 4
FB807	125846-1	FERRITE BEAD, 600 OHM .5A 0805	L 5
FB808	125846-1	FERRITE BEAD, 600 OHM .5A 0805	L 4
FB809	125846-1	FERRITE BEAD, 600 OHM .5A 0805	L 5
FB1000	125846-1	FERRITE BEAD, 600 OHM .5A 0805	O 14
FB1001	125846-1	FERRITE BEAD, 600 OHM .5A 0805	O 14
FB1002	125846-1	FERRITE BEAD, 600 OHM .5A 0805	N 14
FB1003	125846-1	FERRITE BEAD, 600 OHM .5A 0805	N 14
FB1004	125846-1	FERRITE BEAD, 600 OHM .5A 0805	I 13
FB1005	125846-1	FERRITE BEAD, 600 OHM .5A 0805	I 13
H1		OPEN	F 13

HW1	A10019-16	6 X 32 PCB CAPTIVE NUT	M 14
HW2	133915-1	THREADED NUT W/FAST-ON	H 10
HW2X	137446-2	BRKT; NMS BCA OUTPUT	C 10
HW3	133915-1	THREADED NUT W/FAST-ON	I 10
HW4	133915-1	THREADED NUT W/FAST-ON	I 10
HW5	133915-1	THREADED NUT W/FAST-ON	J 10
HW6	133915-1	THREADED NUT W/FAST-ON	K 10
HW7	133915-1	THREADED NUT W/FAST-ON	L 10
HW8	133915-1	THREADED NUT W/FAST-ON	L 10
HW9	133915-1	THREADED NUT W/FAST-ON	M 10
HW10		OPEN	J 13
HW11		OPEN	L 13
HW12	137135-1	HEATSINK; NMS BCA BRIDGE	M 14
HW13	103415-10605	SCR, #6-32X.312 THD ROLL	N 14
HW14	103415-10605	SCR, #6-32X.312 THD ROLL	O 14
HW15	103415-10605	SCR, #6-32X.312 THD ROLL	M 14
HW16	140090-1	SILPAD; .74 X 2.83 W/ ADHESIVE+D1444	O 14
HW17	133849-1	CLIP, HS TO-220 BRIDGE	O 14
HW18	136540-9	PWB, I-TECH PANEL 2	A 1
HW19	101016-1	LBL, BARCODE	J 14
HW20	101016-1	LBL, BARCODE	J 6*
HW21	101016-1	LBL, BARCODE	P 6*
HW22	101016-1	LBL, BARCODE	D 5
HW23	101016-1	LBL, BARCODE	L 2
HW26	101016-1	LBL, BARCODE	A 14
HW27	137208-1	.250 FASTON, FEMALE HANDINSERT	D 11
HW28	137208-1	.250 FASTON, FEMALE HANDINSERT	D 11
HW29	137208-1	.250 FASTON, FEMALE HANDINSERT	D 11
HW30	137208-1	.250 FASTON, FEMALE HANDINSERT	D 11
HW31	137208-1	.250 FASTON, FEMALE HANDINSERT	D 10
HW32	137208-1	.250 FASTON, FEMALE HANDINSERT	D 9
HW33	137208-1	.250 FASTON, FEMALE HANDINSERT	D 9
HW34	137208-1	.250 FASTON, FEMALE HANDINSERT	D 9
HW300	133807-1	WASHER, SOLDERABLE PC MNT 6X32	A 1
HW301	133807-1	WASHER, SOLDERABLE PC MNT 6X32	B 1
HW302	133807-1	WASHER, SOLDERABLE PC MNT 6X32	D 1
HW303	133807-1	WASHER, SOLDERABLE PC MNT 6X32	C 1
HW304	133807-1	WASHER, SOLDERABLE PC MNT 6X32	D 1
HW305	133807-1	WASHER, SOLDERABLE PC MNT 6X32	E 1
HW306	133807-1	WASHER, SOLDERABLE PC MNT 6X32	G 1
HW307	133807-1	WASHER, SOLDERABLE PC MNT 6X32	F 1
J2	136553-1	XLR, FEM HORZ PC METAL GND	E 15
J2A	139900-1	CBL, 20PIN 9" 26AWG PICOFLEX	J 5
J2B	139899-1	CBL, 18PIN 9" 26AWG PICOFLEX	J 4
J3	136553-1	XLR, FEM HORZ PC METAL GND	B 15
J11	136889-1	CONN, 6POS DUAL ROW 0.1"C-C TH	D 14
J300	131159-1	RECEP,32P VERT TOP & BOT ENTRY	B 5
J301	137204-1	CONN, SPKON CHROME NLT4MP	D 9
J302	137363-1	BDG POST, PC MOUNT RED/GOLD	C 10
J303	137361-1	BDG POST, PC MOUNT BLACK/GOLD	C 11
J304	137204-1	CONN, SPKON CHROME NLT4MP	D 11
J305	137361-1	BDG POST, PC MOUNT BLACK/GOLD	C 9
J306	137363-1	BDG POST, PC MOUNT RED/GOLD	C 11
J800	136627-1	HDR, LATCH/EJECT 24 PIN .1X.1	I 4
J1000	131314-1	RECEPT, 30P VERT 2ROW .1 CTR	N 13
J1001	131314-1	RECEPT, 30P VERT 2ROW .1 CTR	J 13
J1002	132551-1	RECEPT, 8PIN VERT .1 CTRS SMD	P 9
J1003	132551-1	RECEPT, 8PIN VERT .1 CTRS SMD	N 9
J1004	132551-1	RECEPT, 8PIN VERT .1 CTRS SMD	M 9

J1005	132551-1	RECEPT, 8PIN VERT .1 CTRS SMD	K 9
J1006	132551-1	RECEPT, 8PIN VERT .1 CTRS SMD	J 9
J1007	132551-1	RECEPT, 8PIN VERT .1 CTRS SMD	H 9
J1008	132551-1	RECEPT, 8PIN VERT .1 CTRS SMD	G 9
J1009	132551-1	RECEPT, 8PIN VERT .1 CTRS SMD	E 9
J1010	131159-1	RECEP,32P VERT TOP & BOT ENTRY	L 13*
J1011	130640-1	HEADER,3M LATCH 26 PIN .1X.1	F 13
J1012	131315-2	HDR, 6PIN MATE N LOK IN LINE	E 11
J1013	131317-1	HDR, LATCH/EJECT 50 PIN .1X.1	G 13
J1014	C 7873-0	2POS .1 CENTER MTA HEADER TIN	E 14
J1015	C 7873-0	2POS .1 CENTER MTA HEADER TIN	O 14
L300	133327-2	INDUCTOR, 2UH ADJUSTABLE	B 4
L301	133326-2	INDUCTOR, 1UH ADJUSTABLE	B 4
L302	131404-1	INDUCTOR, 1UH 30A AIRCORE	B 7
L303	133327-2	INDUCTOR, 2UH ADJUSTABLE	G 4
L304	133326-2	INDUCTOR, 1UH ADJUSTABLE	F 4
L305	131404-1	INDUCTOR, 1UH 30A AIRCORE	D 7
L1000	127988-1	CHOKE,10UH <0.1OHM SMT .3" DIA	O 9
L1001	127988-1	CHOKE,10UH <0.1OHM SMT .3" DIA	L 9
L1002	127988-1	CHOKE,10UH <0.1OHM SMT .3" DIA	I 9
L1003	127988-1	CHOKE,10UH <0.1OHM SMT .3" DIA	F 9
L1004	127988-1	CHOKE,10UH <0.1OHM SMT .3" DIA	F 13
L1005	127988-1	CHOKE,10UH <0.1OHM SMT .3" DIA	E 13
L1006	137450-1	INDUCTOR, 3.3UH 290ma SMD	L 12
L1007	137450-1	INDUCTOR, 3.3UH 290ma SMD	L 12
P2	136554-1	XLR, MALE HORZ PC METAL GND	D 15
P3	136554-1	XLR, MALE HORZ PC METAL GND	A 15
P300	137225-1	CABLE,16POS 3.3" SOLDERIN FLEX	B 8
P500	132533-1	HDR, 8PIN .1 CTR R/A SMD	J 6
P500X	132533-1	HDR, 8PIN .1 CTR R/A SMD	P 6
P501	132533-1	HDR, 8PIN .1 CTR R/A SMD	H 6
P501X	132533-1	HDR, 8PIN .1 CTR R/A SMD	N 6
P502	132533-1	HDR, 8PIN .1 CTR R/A SMD	G 6
P502X	132533-1	HDR, 8PIN .1 CTR R/A SMD	M 6
P503	132533-1	HDR, 8PIN .1 CTR R/A SMD	E 6
P503X	132533-1	HDR, 8PIN .1 CTR R/A SMD	K 6
P800	131764-2	CBL, 50PIN IDC HDR - IDC SKT EPOXY	J 2
P804	131472-1	HDR, 10PIN DUAL ROW VERT SMT	H 3
Q500	125798-1	TRANSISTOR,MMBT3906LTI PNP SMT	H 7
Q500X	125798-1	TRANSISTOR,MMBT3906LTI PNP SMT	N 7
Q501	125798-1	TRANSISTOR,MMBT3906LTI PNP SMT	H 7
Q501X	125798-1	TRANSISTOR,MMBT3906LTI PNP SMT	N 7
Q502	125798-1	TRANSISTOR,MMBT3906LTI PNP SMT	H 7
Q502X	125798-1	TRANSISTOR,MMBT3906LTI PNP SMT	N 7
Q503	125798-1	TRANSISTOR,MMBT3906LTI PNP SMT	H 7
Q503X	125798-1	TRANSISTOR,MMBT3906LTI PNP SMT	N 7
Q504	125798-1	TRANSISTOR,MMBT3906LTI PNP SMT	H 7
Q504X	125798-1	TRANSISTOR,MMBT3906LTI PNP SMT	N 7
Q505	125798-1	TRANSISTOR,MMBT3906LTI PNP SMT	I 7
Q505X	125798-1	TRANSISTOR,MMBT3906LTI PNP SMT	O 7
Q506	125798-1	TRANSISTOR,MMBT3906LTI PNP SMT	I 7
Q506X	125798-1	TRANSISTOR,MMBT3906LTI PNP SMT	O 7
Q507	132534-1	XSISTOR, PNP 30V LOW CAP SOT23	I 7
Q507X	132534-1	XSISTOR, PNP 30V LOW CAP SOT23	O 7
Q508	132534-1	XSISTOR, PNP 30V LOW CAP SOT23	I 7
Q508X	132534-1	XSISTOR, PNP 30V LOW CAP SOT23	O 7
Q509	C 7448-1	MMBT3904 CHIP NPN	I 7
Q509X	C 7448-1	MMBT3904 CHIP NPN	O 7
Q510	125798-1	TRANSISTOR,MMBT3906LTI PNP SMT	I 7

Q510X	125798-1	TRANSISTOR,MMBT3906LTI PNP SMT	O 7
Q511	131046-1	TRANSISTOR, KSC3265 NPN SOT-23	J 7
Q511X	131046-1	TRANSISTOR, KSC3265 NPN SOT-23	P 7
Q512	131047-1	TRANSISTOR, KSA1298 PNP SOT-23	J 7
Q512X	131047-1	TRANSISTOR, KSA1298 PNP SOT-23	P 7
Q513	131046-1	TRANSISTOR, KSC3265 NPN SOT-23	I 7
Q513X	131046-1	TRANSISTOR, KSC3265 NPN SOT-23	O 7
Q514	131047-1	TRANSISTOR, KSA1298 PNP SOT-23	I 7
Q514X	131047-1	TRANSISTOR, KSA1298 PNP SOT-23	O 7
Q515	131046-1	TRANSISTOR, KSC3265 NPN SOT-23	H 7
Q515X	131046-1	TRANSISTOR, KSC3265 NPN SOT-23	N 7
Q516	131047-1	TRANSISTOR, KSA1298 PNP SOT-23	H 7
Q516X	131047-1	TRANSISTOR, KSA1298 PNP SOT-23	N 7
Q517	131046-1	TRANSISTOR, KSC3265 NPN SOT-23	H 7
Q517X	131046-1	TRANSISTOR, KSC3265 NPN SOT-23	N 7
Q518	131047-1	TRANSISTOR, KSA1298 PNP SOT-23	H 7
Q518X	131047-1	TRANSISTOR, KSA1298 PNP SOT-23	N 7
Q519	125798-1	TRANSISTOR,MMBT3906LTI PNP SMT	G 7
Q519X	125798-1	TRANSISTOR,MMBT3906LTI PNP SMT	M 7
Q520	125798-1	TRANSISTOR,MMBT3906LTI PNP SMT	G 7
Q520X	125798-1	TRANSISTOR,MMBT3906LTI PNP SMT	M 7
Q521	125798-1	TRANSISTOR,MMBT3906LTI PNP SMT	G 8
Q521X	125798-1	TRANSISTOR,MMBT3906LTI PNP SMT	M 8
Q522	125798-1	TRANSISTOR,MMBT3906LTI PNP SMT	G 7
Q522X	125798-1	TRANSISTOR,MMBT3906LTI PNP SMT	M 7
Q523	125798-1	TRANSISTOR,MMBT3906LTI PNP SMT	F 8
Q523X	125798-1	TRANSISTOR,MMBT3906LTI PNP SMT	L 8
Q524	125798-1	TRANSISTOR,MMBT3906LTI PNP SMT	F 8
Q524X	125798-1	TRANSISTOR,MMBT3906LTI PNP SMT	L 8
Q525	125798-1	TRANSISTOR,MMBT3906LTI PNP SMT	E 8
Q525X	125798-1	TRANSISTOR,MMBT3906LTI PNP SMT	K 8
Q526	132534-1	XSISTOR, PNP 30V LOW CAP SOT23	F 7
Q526X	132534-1	XSISTOR, PNP 30V LOW CAP SOT23	L 7
Q527	132534-1	XSISTOR, PNP 30V LOW CAP SOT23	F 7
Q527X	132534-1	XSISTOR, PNP 30V LOW CAP SOT23	L 7
Q528	C 7448-1	MMBT3904 CHIP NPN	F 7
Q528X	C 7448-1	MMBT3904 CHIP NPN	L 7
Q529	125798-1	TRANSISTOR,MMBT3906LTI PNP SMT	F 7
Q529X	125798-1	TRANSISTOR,MMBT3906LTI PNP SMT	L 7
Q530	131046-1	TRANSISTOR, KSC3265 NPN SOT-23	G 7
Q530X	131046-1	TRANSISTOR, KSC3265 NPN SOT-23	M 7
Q531	131047-1	TRANSISTOR, KSA1298 PNP SOT-23	G 7
Q531X	131047-1	TRANSISTOR, KSA1298 PNP SOT-23	M 7
Q532	131046-1	TRANSISTOR, KSC3265 NPN SOT-23	F 7
Q532X	131046-1	TRANSISTOR, KSC3265 NPN SOT-23	L 7
Q533	131047-1	TRANSISTOR, KSA1298 PNP SOT-23	G 7
Q533X	131047-1	TRANSISTOR, KSA1298 PNP SOT-23	M 7
Q534	131046-1	TRANSISTOR, KSC3265 NPN SOT-23	E 7
Q534X	131046-1	TRANSISTOR, KSC3265 NPN SOT-23	K 7
Q535	131047-1	TRANSISTOR, KSA1298 PNP SOT-23	E 7
Q535X	131047-1	TRANSISTOR, KSA1298 PNP SOT-23	K 7
Q536	131046-1	TRANSISTOR, KSC3265 NPN SOT-23	E 7
Q536X	131046-1	TRANSISTOR, KSC3265 NPN SOT-23	K 7
Q537	131047-1	TRANSISTOR, KSA1298 PNP SOT-23	E 7
Q537X	131047-1	TRANSISTOR, KSA1298 PNP SOT-23	K 7
Q800	C 7448-1	MMBT3904 CHIP NPN	I 5
Q801	C 7448-1	MMBT3904 CHIP NPN	H 5
Q802	134833-1	FET, N-CH JFET 30V SOT-23	K 4
Q804	134833-1	FET, N-CH JFET 30V SOT-23	K 3

Q811	125798-1	TRANSISTOR,MMBT3906LTI PNP SMT	L 2
Q812	125798-1	TRANSISTOR,MMBT3906LTI PNP SMT	I 2
Q1000	131525-1	FET, 131250-1 90DEG LEAD BEND	P 9
Q1001	131525-1	FET, 131250-1 90DEG LEAD BEND	O 9
Q1002	131525-1	FET, 131250-1 90DEG LEAD BEND	N 9
Q1003	131525-1	FET, 131250-1 90DEG LEAD BEND	N 9
Q1004	131525-1	FET, 131250-1 90DEG LEAD BEND	M 9
Q1005	131525-1	FET, 131250-1 90DEG LEAD BEND	M 9
Q1006	131525-1	FET, 131250-1 90DEG LEAD BEND	K 9
Q1007	131525-1	FET, 131250-1 90DEG LEAD BEND	K 9
Q1008	131525-1	FET, 131250-1 90DEG LEAD BEND	J 9
Q1009	131525-1	FET, 131250-1 90DEG LEAD BEND	J 9
Q1010	131525-1	FET, 131250-1 90DEG LEAD BEND	H 9
Q1011	131525-1	FET, 131250-1 90DEG LEAD BEND	H 9
Q1012	131525-1	FET, 131250-1 90DEG LEAD BEND	G 9
Q1013	131525-1	FET, 131250-1 90DEG LEAD BEND	G 9
Q1014	131525-1	FET, 131250-1 90DEG LEAD BEND	E 9
Q1015	131525-1	FET, 131250-1 90DEG LEAD BEND	E 9
Q1016	102483-1	PNP 300V 500MA SOT-23	F 13
Q1017	C 7448-1	MMBT3904 CHIP NPN	H 13
Q1018	125798-1	TRANSISTOR,MMBT3906LTI PNP SMT	P 13
Q1019	C 7448-1	MMBT3904 CHIP NPN	P 14
Q1020	138501-1	PRP, 133282-1 (TIP32C) PNP.300	P 14
R260	A11368-10001	100 OHM 1% 0805 RES T/R	C 15
R261	A11368-10001	100 OHM 1% 0805 RES T/R	C 15
R262	A11368-10001	100 OHM 1% 0805 RES T/R	C 15
R263	A11368-10001	100 OHM 1% 0805 RES T/R	C 14
R264	A11368-10001	100 OHM 1% 0805 RES T/R	C 14
R265	A11368-10001	100 OHM 1% 0805 RES T/R	C 15
R266	A11368-36521	36.5K OHM 0.1W 1% 0805 T/R	K 3
R267	A11368-10001	100 OHM 1% 0805 RES T/R	C 15
R268	A11368-10001	100 OHM 1% 0805 RES T/R	C 15
R269	A11368-10001	100 OHM 1% 0805 RES T/R	C 14
R270	A11368-10001	100 OHM 1% 0805 RES T/R	C 14
R300	A11368-15011	1.5K 1/10W 1% SMD 0805 T/R	C 3
R301	A11368-35711	RES, 3.57K 1% 0.10W 0805	D 3
R302	A11368-82501	RES, 825 OHM 1% 0.1W 0805	D 3
R303	A11368-43211	RES, 4.32K 0.1W 1% 0805 T/R	C 3
R304	A11368-10011	1.KOHM .1W 1% CHIP 0805	D 3
R305	A11368-10011	1.KOHM .1W 1% CHIP 0805	C 3
R306	A11368-10011	1.KOHM .1W 1% CHIP 0805	C 3
R307	A11368-10011	1.KOHM .1W 1% CHIP 0805	C 1
R308	A11368-10011	1.KOHM .1W 1% CHIP 0805	D 3
R309	138464-1	PRP, 138027-1 .04 OHM .125	B 2
R310	138464-1	PRP, 138027-1 .04 OHM .125	C 2
R311	138464-1	PRP, 138027-1 .04 OHM .125	B 2
R312	138464-1	PRP, 138027-1 .04 OHM .125	D 2
R313	138464-1	PRP, 138027-1 .04 OHM .125	B 2
R314	138464-1	PRP, 138027-1 .04 OHM .125	C 2
R315	132559-1	RES, 8.2 OHM 5% 2W RADIAL	B 4
R316	132559-1	RES, 8.2 OHM 5% 2W RADIAL	B 5
R317	132559-1	RES, 8.2 OHM 5% 2W RADIAL	B 5
R318	132560-1	RES, 220 OHM 5% 2W RADIAL	A 4
R319	132560-1	RES, 220 OHM 5% 2W RADIAL	A 4
R320	132560-1	RES, 220 OHM 5% 2W RADIAL	A 4
R321	132560-1	RES, 220 OHM 5% 2W RADIAL	A 4
R322	132560-1	RES, 220 OHM 5% 2W RADIAL	A 4
R323	132560-1	RES, 220 OHM 5% 2W RADIAL	A 4
R324	132560-1	RES, 220 OHM 5% 2W RADIAL	A 3

R325	132560-1	RES, 220 OHM 5% 2W RADIAL	A 3
R326	132560-1	RES, 220 OHM 5% 2W RADIAL	A 2
R327	132560-1	RES, 220 OHM 5% 2W RADIAL	A 2
R328	132560-1	RES, 220 OHM 5% 2W RADIAL	A 2
R329	132560-1	RES, 220 OHM 5% 2W RADIAL	A 3
R330	132560-1	RES, 220 OHM 5% 2W RADIAL	A 3
R331	132560-1	RES, 220 OHM 5% 2W RADIAL	A 3
R332	132561-1	RES, 91 OHM 5% 2W RADIAL	A 5
R333	132561-1	RES, 91 OHM 5% 2W RADIAL	A 5
R334	132561-1	RES, 91 OHM 5% 2W RADIAL	A 5
R335	132561-1	RES, 91 OHM 5% 2W RADIAL	A 6
R336	132561-1	RES, 91 OHM 5% 2W RADIAL	A 6
R337	132561-1	RES, 91 OHM 5% 2W RADIAL	A 6
R338	132561-1	RES, 91 OHM 5% 2W RADIAL	A 6
R339	132561-1	RES, 91 OHM 5% 2W RADIAL	A 6
R340	132561-1	RES, 91 OHM 5% 2W RADIAL	A 7
R341	A11368-15011	1.5K 1/10W 1% SMD 0805 T/R	E 3
R342	A11368-35711	RES, 3.57K 1% 0.10W 0805	E 3
R343	A11368-82501	RES, 825 OHM 1% 0.1W 0805	D 3
R344	A11368-43211	RES, 4.32K 0.1W 1% 0805 T/R	E 3
R345	A11368-10011	1.KOHM .1W 1% CHIP 0805	E 3
R346	A11368-10011	1.KOHM .1W 1% CHIP 0805	F 3
R347	A11368-10011	1.KOHM .1W 1% CHIP 0805	E 3
R348	A11368-10011	1.KOHM .1W 1% CHIP 0805	D 3
R349	A11368-10011	1.KOHM .1W 1% CHIP 0805	F 1
R350	138464-1	PRP, 138027-1 .04 OHM .125	E 2
R351	138464-1	PRP, 138027-1 .04 OHM .125	F 2
R352	138464-1	PRP, 138027-1 .04 OHM .125	D 2
R353	138464-1	PRP, 138027-1 .04 OHM .125	G 2
R354	138464-1	PRP, 138027-1 .04 OHM .125	E 2
R355	138464-1	PRP, 138027-1 .04 OHM .125	F 2
R356	132559-1	RES, 8.2 OHM 5% 2W RADIAL	E 4
R357	132559-1	RES, 8.2 OHM 5% 2W RADIAL	E 4
R358	132559-1	RES, 8.2 OHM 5% 2W RADIAL	E 4
R359	132560-1	RES, 220 OHM 5% 2W RADIAL	G 4
R360	132560-1	RES, 220 OHM 5% 2W RADIAL	G 4
R361	132560-1	RES, 220 OHM 5% 2W RADIAL	G 4
R362	132560-1	RES, 220 OHM 5% 2W RADIAL	G 4
R363	132560-1	RES, 220 OHM 5% 2W RADIAL	G 4
R364	132560-1	RES, 220 OHM 5% 2W RADIAL	G 4
R365	132560-1	RES, 220 OHM 5% 2W RADIAL	G 3
R366	132560-1	RES, 220 OHM 5% 2W RADIAL	G 3
R367	132560-1	RES, 220 OHM 5% 2W RADIAL	G 3
R368	132560-1	RES, 220 OHM 5% 2W RADIAL	G 3
R369	132560-1	RES, 220 OHM 5% 2W RADIAL	G 3
R370	132560-1	RES, 220 OHM 5% 2W RADIAL	G 2
R371	132560-1	RES, 220 OHM 5% 2W RADIAL	G 2
R372	132560-1	RES, 220 OHM 5% 2W RADIAL	G 2
R373	132561-1	RES, 91 OHM 5% 2W RADIAL	E 4
R374	132561-1	RES, 91 OHM 5% 2W RADIAL	E 4
R375	132561-1	RES, 91 OHM 5% 2W RADIAL	E 4
R376	132561-1	RES, 91 OHM 5% 2W RADIAL	F 4
R377	132561-1	RES, 91 OHM 5% 2W RADIAL	F 4
R378	132561-1	RES, 91 OHM 5% 2W RADIAL	F 4
R379	132561-1	RES, 91 OHM 5% 2W RADIAL	F 4
R380	132561-1	RES, 91 OHM 5% 2W RADIAL	F 4
R381	132561-1	RES, 91 OHM 5% 2W RADIAL	G 4
R500	A11368-56201	562 OHM 0.1W 1% 0805 SMT	H 7
R500X	A11368-56201	562 OHM 0.1W 1% 0805 SMT	N 7

R501		OPEN	G 7
R501X		OPEN	N 7
R502	A11368-10021	10K 1/10W 1% SMD 0805 T/R	H 7
R502X	A11368-10021	10K 1/10W 1% SMD 0805 T/R	N 7
R503	A11368-10021	10K 1/10W 1% SMD 0805 T/R	H 8
R503X	A11368-10021	10K 1/10W 1% SMD 0805 T/R	N 8
R504	A11368-10021	10K 1/10W 1% SMD 0805 T/R	H 7
R504X	A11368-10021	10K 1/10W 1% SMD 0805 T/R	N 7
R505	A11368-10021	10K 1/10W 1% SMD 0805 T/R	H 8
R505X	A11368-10021	10K 1/10W 1% SMD 0805 T/R	N 8
R506	A11368-10021	10K 1/10W 1% SMD 0805 T/R	I 8
R506X	A11368-10021	10K 1/10W 1% SMD 0805 T/R	O 8
R507	A11368-10021	10K 1/10W 1% SMD 0805 T/R	I 8
R507X	A11368-10021	10K 1/10W 1% SMD 0805 T/R	O 8
R508	A11368-10021	10K 1/10W 1% SMD 0805 T/R	I 7
R508X	A11368-10021	10K 1/10W 1% SMD 0805 T/R	O 7
R509	A11368-90911	9.09 KOHM .1W 1% 0805 T/R	I 7
R509X	A11368-90911	9.09 KOHM .1W 1% 0805 T/R	O 7
R510	A11368-14311	1.43 KOHM 0.1W 1% 0805 SMT	I 7
R510X	A11368-14311	1.43 KOHM 0.1W 1% 0805 SMT	O 7
R511	A11371-5R11	5.1 OHM 0.1W 5% 0805 SMT	J 7
R511X	A11371-5R11	5.1 OHM 0.1W 5% 0805 SMT	P 7
R512	A11368-20001	200. OHM .1W 1% CHIP 0805	J 7
R512X	A11368-20001	200. OHM .1W 1% CHIP 0805	P 7
R513	A11371-5R11	5.1 OHM 0.1W 5% 0805 SMT	J 7
R513X	A11371-5R11	5.1 OHM 0.1W 5% 0805 SMT	P 7
R514	A11368-10R01	10 OHM .1W 1% 0805 T/R	J 7
R514X	A11368-10R01	10 OHM .1W 1% 0805 T/R	P 7
R515	A11371-5R11	5.1 OHM 0.1W 5% 0805 SMT	I 7
R515X	A11371-5R11	5.1 OHM 0.1W 5% 0805 SMT	O 7
R516	A11368-20001	200. OHM .1W 1% CHIP 0805	I 7
R516X	A11368-20001	200. OHM .1W 1% CHIP 0805	O 7
R517	A11371-5R11	5.1 OHM 0.1W 5% 0805 SMT	J 7
R517X	A11371-5R11	5.1 OHM 0.1W 5% 0805 SMT	P 7
R518	A11368-10R01	10 OHM .1W 1% 0805 T/R	J 7
R518X	A11368-10R01	10 OHM .1W 1% 0805 T/R	P 7
R519	A11371-5R11	5.1 OHM 0.1W 5% 0805 SMT	H 7
R519X	A11371-5R11	5.1 OHM 0.1W 5% 0805 SMT	N 7
R520	A11368-20001	200. OHM .1W 1% CHIP 0805	H 7
R520X	A11368-20001	200. OHM .1W 1% CHIP 0805	N 7
R521	A11371-5R11	5.1 OHM 0.1W 5% 0805 SMT	H 7
R521X	A11371-5R11	5.1 OHM 0.1W 5% 0805 SMT	N 7
R522	A11368-10R01	10 OHM .1W 1% 0805 T/R	H 7
R522X	A11368-10R01	10 OHM .1W 1% 0805 T/R	N 7
R523	A11371-5R11	5.1 OHM 0.1W 5% 0805 SMT	H 7
R523X	A11371-5R11	5.1 OHM 0.1W 5% 0805 SMT	N 7
R524	A11368-20001	200. OHM .1W 1% CHIP 0805	H 7
R524X	A11368-20001	200. OHM .1W 1% CHIP 0805	N 7
R525	A11371-5R11	5.1 OHM 0.1W 5% 0805 SMT	H 7
R525X	A11371-5R11	5.1 OHM 0.1W 5% 0805 SMT	N 7
R526	A11368-10R01	10 OHM .1W 1% 0805 T/R	H 7
R526X	A11368-10R01	10 OHM .1W 1% 0805 T/R	N 7
R527	A11368-56201	562 OHM 0.1W 1% 0805 SMT	G 7
R527X	A11368-56201	562 OHM 0.1W 1% 0805 SMT	M 7
R528		OPEN	G 7
R528X		OPEN	M 7
R529	A11368-10021	10K 1/10W 1% SMD 0805 T/R	G 7
R529X	A11368-10021	10K 1/10W 1% SMD 0805 T/R	M 7
R530	A11368-10021	10K 1/10W 1% SMD 0805 T/R	G 7

R530X	A11368-10021	10K 1/10W 1% SMD 0805 T/R	M 7
R531	A11368-10021	10K 1/10W 1% SMD 0805 T/R	G 7
R531X	A11368-10021	10K 1/10W 1% SMD 0805 T/R	M 7
R532	A11368-10021	10K 1/10W 1% SMD 0805 T/R	F 7
R532X	A11368-10021	10K 1/10W 1% SMD 0805 T/R	L 7
R533	A11368-10021	10K 1/10W 1% SMD 0805 T/R	F 7
R533X	A11368-10021	10K 1/10W 1% SMD 0805 T/R	L 7
R534	A11368-10021	10K 1/10W 1% SMD 0805 T/R	E 7
R534X	A11368-10021	10K 1/10W 1% SMD 0805 T/R	K 7
R535	A11368-10021	10K 1/10W 1% SMD 0805 T/R	F 7
R535X	A11368-10021	10K 1/10W 1% SMD 0805 T/R	L 7
R536	A11368-90911	9.09 KOHM .1W 1% 0805 T/R	F 7
R536X	A11368-90911	9.09 KOHM .1W 1% 0805 T/R	L 7
R537	A11368-14311	1.43 KOHM 0.1W 1% 0805 SMT	F 7
R537X	A11368-14311	1.43 KOHM 0.1W 1% 0805 SMT	L 7
R538	A11371-5R11	5.1 OHM 0.1W 5% 0805 SMT	G 7
R538X	A11371-5R11	5.1 OHM 0.1W 5% 0805 SMT	M 7
R539	A11368-20001	200. OHM .1W 1% CHIP 0805	G 7
R539X	A11368-20001	200. OHM .1W 1% CHIP 0805	M 7
R540	A11371-5R11	5.1 OHM 0.1W 5% 0805 SMT	G 7
R540X	A11371-5R11	5.1 OHM 0.1W 5% 0805 SMT	M 7
R541	A11368-10R01	10 OHM .1W 1% 0805 T/R	G 7
R541X	A11368-10R01	10 OHM .1W 1% 0805 T/R	M 7
R542	A11371-5R11	5.1 OHM 0.1W 5% 0805 SMT	G 7
R542X	A11371-5R11	5.1 OHM 0.1W 5% 0805 SMT	M 7
R543	A11368-20001	200. OHM .1W 1% CHIP 0805	F 7
R543X	A11368-20001	200. OHM .1W 1% CHIP 0805	L 7
R544	A11371-5R11	5.1 OHM 0.1W 5% 0805 SMT	G 7
R544X	A11371-5R11	5.1 OHM 0.1W 5% 0805 SMT	M 7
R545	A11368-10R01	10 OHM .1W 1% 0805 T/R	G 7
R545X	A11368-10R01	10 OHM .1W 1% 0805 T/R	M 7
R546	A11371-5R11	5.1 OHM 0.1W 5% 0805 SMT	E 7
R546X	A11371-5R11	5.1 OHM 0.1W 5% 0805 SMT	K 7
R547	A11368-20001	200. OHM .1W 1% CHIP 0805	E 7
R547X	A11368-20001	200. OHM .1W 1% CHIP 0805	K 7
R548	A11371-5R11	5.1 OHM 0.1W 5% 0805 SMT	E 7
R548X	A11371-5R11	5.1 OHM 0.1W 5% 0805 SMT	K 7
R549	A11368-10R01	10 OHM .1W 1% 0805 T/R	E 7
R549X	A11368-10R01	10 OHM .1W 1% 0805 T/R	K 7
R550	A11371-5R11	5.1 OHM 0.1W 5% 0805 SMT	E 7
R550X	A11371-5R11	5.1 OHM 0.1W 5% 0805 SMT	K 7
R551	A11368-20001	200. OHM .1W 1% CHIP 0805	E 7
R551X	A11368-20001	200. OHM .1W 1% CHIP 0805	K 7
R552	A11371-5R11	5.1 OHM 0.1W 5% 0805 SMT	E 7
R552X	A11371-5R11	5.1 OHM 0.1W 5% 0805 SMT	K 7
R553	A11368-10R01	10 OHM .1W 1% 0805 T/R	E 7
R553X	A11368-10R01	10 OHM .1W 1% 0805 T/R	K 7
R554	A11368-33221	33.2KOHM .1W 1% 0805 T/R	G 7
R554X	A11368-33221	33.2KOHM .1W 1% 0805 T/R	M 7
R555	A11368-33221	33.2KOHM .1W 1% 0805 T/R	G 7
R555X	A11368-33221	33.2KOHM .1W 1% 0805 T/R	M 7
R556	A11368-56201	562 OHM 0.1W 1% 0805 SMT	G 7
R556X	A11368-56201	562 OHM 0.1W 1% 0805 SMT	N 7
R557	A11368-56201	562 OHM 0.1W 1% 0805 SMT	G 7
R557X	A11368-56201	562 OHM 0.1W 1% 0805 SMT	M 7
R800	A11368-69821	RES, 69.8K 1% 0.1W SMT 0805	L 2
R801		OPEN	L 4
R802	A11368-69821	RES, 69.8K 1% 0.1W SMT 0805	K 2
R803		OPEN	J 4

R804	137362-1	10K 0.1% 0.1W 0805 THIN FILM	K 5
R805	137362-1	10K 0.1% 0.1W 0805 THIN FILM	K 4
R806	A11368-76811	7.68KOHM 0.10W 1% SMT 0805	K 5
R807	A11368-76811	7.68KOHM 0.10W 1% SMT 0805	K 4
R808	A11368-10020	RES, 10.0 KOHM 1/16W 1% 0603	I 1
R809	A11368-49910	RES, 4.99 KOHM 1/16W 1% 0603	I 1
R810	A11368-10020	RES, 10.0 KOHM 1/16W 1% 0603	I 1
R811	A11368-49910	RES, 4.99 KOHM 1/16W 1% 0603	I 1
R812	A11368-25501	255 OHM 1% 0.1W 0805 T/R	I 3
R813	A11368-10010	RES, 1.0 KOHM 1/16W 1% 0603	I 5
R814	A11368-10010	RES, 1.0 KOHM 1/16W 1% 0603	I 5
R815	A11368-10010	RES, 1.0 KOHM 1/16W 1% 0603	I 4
R816	A11368-10010	RES, 1.0 KOHM 1/16W 1% 0603	I 4
R817	A11368-10010	RES, 1.0 KOHM 1/16W 1% 0603	I 4
R818	A11368-33R20	RES, 33.2 OHM 1/16W 1% 0603	H 4
R819	A11368-10010	RES, 1.0 KOHM 1/16W 1% 0603	H 4
R820	A11368-33R20	RES, 33.2 OHM 1/16W 1% 0603	I 4
R821	A11368-10010	RES, 1.0 KOHM 1/16W 1% 0603	I 4
R822	A11368-33R20	RES, 33.2 OHM 1/16W 1% 0603	H 4
R823	A11368-10010	RES, 1.0 KOHM 1/16W 1% 0603	H 4
R824	A11368-33R20	RES, 33.2 OHM 1/16W 1% 0603	I 4
R825	A11368-10010	RES, 1.0 KOHM 1/16W 1% 0603	I 4
R826	A11368-33R20	RES, 33.2 OHM 1/16W 1% 0603	H 4
R827	A11368-10010	RES, 1.0 KOHM 1/16W 1% 0603	H 4
R828	A11368-10020	RES, 10.0 KOHM 1/16W 1% 0603	H 2
R829	A11368-33R20	RES, 33.2 OHM 1/16W 1% 0603	I 4
R830	A11368-10010	RES, 1.0 KOHM 1/16W 1% 0603	I 4
R831	A11368-75021	75K 1/10W 1% SMD 0805 T/R	K 3
R832	A11368-10030	RES, 100.0 KOHM 1/16W 1% 0603	K 3
R833	A11368-10020	RES, 10.0 KOHM 1/16W 1% 0603	K 4
R834	A11368-35721	35.7 KOHM 0.1W 1% 0805 T/R	K 4
R835	A11368-10040	RES, 1.00 MOHM 1/16W 1% 0603	K 3
R836	A11368-49931	499KOHM .1W 1% 0805 T/R	K 4
R837	A11371-0R01	RES, 0 OHM 0805 50 MILOHM MAX	K 4
R838	A11368-18231	182 KOHM 1% 0.10W 0805	L 3
R839	A11368-97601	976 OHM 1% 0.1W 0805 T/R	L 2
R840	A11368-15021	15.0K, 0.10W 1% MF 0805	L 3
R841	A11368-37411	3.74K OHM 1% 0.1W 0805 T/R	L 3
R842	A11368-18221	18.2KOHM 0.1W 1% CHIP 0805	L 3
R843	A11368-69811	6.98KOHM .1W 1% 0805 T/R	L 3
R844	A11368-36521	36.5K OHM 0.1W 1% 0805 T/R	L 3
R845	A11368-49911	4.99K 1/10W 1% SMD 0805 T/R	L 3
R846	A11368-40201	402 OHM 1% 0805 RES T/R	L 4
R847	A11368-49911	4.99K 1/10W 1% SMD 0805 T/R	L 3
R848	133871-1	TRIMPOT, 500 OHM TOP ADJ T/R	L 3
R849	A11368-22R11	22.1 OHM 0.1W 1% 0805 T/R	L 3
R850	A11368-20030	RES, 200 KOHM 1/16W 1% 0603	I 5
R851	A11368-10010	RES, 1.0 KOHM 1/16W 1% 0603	I 4
R852	A11368-20030	RES, 200 KOHM 1/16W 1% 0603	I 5
R853	A11368-20011	2.0K, 0.10W 1% MF 0805	I 5
R854	A11368-14021	14KOHM .1W 1% 0805 T/R	I 5
R855	A11368-10020	RES, 10.0 KOHM 1/16W 1% 0603	I 5
R856	A11368-10010	RES, 1.0 KOHM 1/16W 1% 0603	I 5
R857	A11368-30121	30.1K, 0.10W 1% MF 0805	I 5
R858	A11368-20030	RES, 200 KOHM 1/16W 1% 0603	I 5
R859	A11368-10040	RES, 1.00 MOHM 1/16W 1% 0603	I 6
R860	A11368-10010	RES, 1.0 KOHM 1/16W 1% 0603	I 5
R861	A11368-30121	30.1K, 0.10W 1% MF 0805	I 5
R862	A11368-30121	30.1K, 0.10W 1% MF 0805	I 5

R863	A11368-10030	RES, 100.0 KOHM 1/16W 1% 0603	I 5
R864	A11368-10011	1.KOHM .1W 1% CHIP 0805	I 5
R865	A11368-10020	RES, 10.0 KOHM 1/16W 1% 0603	I 5
R866	A11368-20030	RES, 200 KOHM 1/16W 1% 0603	I 5
R867	A11368-10020	RES, 10.0 KOHM 1/16W 1% 0603	I 5
R868	A11368-10030	RES, 100.0 KOHM 1/16W 1% 0603	I 5
R869	A11368-33R20	RES, 33.2 OHM 1/16W 1% 0603	H 4
R870	A11368-49931	499KOHM .1W 1% 0805 T/R	K 2
R871	A11371-0R00	RES, 0 OHM 0603 50 MILOHM MAX	L 2
R872	A11371-0R00	RES, 0 OHM 0603 50 MILOHM MAX	I 2
R874	A11368-10020	RES, 10.0 KOHM 1/16W 1% 0603	H 2
R875	A11368-49910	RES, 4.99 KOHM 1/16W 1% 0603	H 2
R876	A11368-10030	RES, 100.0 KOHM 1/16W 1% 0603	I 6
R877	A11368-49920	RES, 49.9 KOHM 1/16W 1% 0603	I 3
R878	A11368-10020	RES, 10.0 KOHM 1/16W 1% 0603	H 2
R879	A11368-10020	RES, 10.0 KOHM 1/16W 1% 0603	H 2
R880	A11368-49910	RES, 4.99 KOHM 1/16W 1% 0603	H 2
R881	137362-1	10K 0.1% 0.1W 0805 THIN FILM	K 5
R882	137362-1	10K 0.1% 0.1W 0805 THIN FILM	K 4
R883	A11368-76811	7.68KOHM 0.10W 1% SMT 0805	K 5
R884	A11368-76811	7.68KOHM 0.10W 1% SMT 0805	K 4
R885	A11368-10030	RES, 100.0 KOHM 1/16W 1% 0603	H 6
R886	A11368-49920	RES, 49.9 KOHM 1/16W 1% 0603	H 4
R887	A11368-10010	RES, 1.0 KOHM 1/16W 1% 0603	I 2
R904	A11368-75021	75K 1/10W 1% SMD 0805 T/R	K 2
R905	A11368-10030	RES, 100.0 KOHM 1/16W 1% 0603	K 3
R906	A11368-10020	RES, 10.0 KOHM 1/16W 1% 0603	K 3
R907	A11368-35721	35.7 KOHM 0.1W 1% 0805 T/R	K 3
R908	A11368-10040	RES, 1.00 MOHM 1/16W 1% 0603	K 2
R909	A11368-49931	499KOHM .1W 1% 0805 T/R	K 3
R910	A11368-49931	499KOHM .1W 1% 0805 T/R	K 3
R911	A11368-18231	182 KOHM 1% 0.10W 0805	K 3
R912	A11368-97601	976 OHM 1% 0.1W 0805 T/R	J 2
R913	A11368-15021	15.0K, 0.10W 1% MF 0805	J 3
R914	A11368-37411	3.74K OHM 1% 0.1W 0805 T/R	J 3
R915	A11368-18221	18.2KOHM 0.1W 1% CHIP 0805	J 3
R916	A11368-69811	6.98KOHM .1W 1% 0805 T/R	K 3
R917	A11368-49911	4.99K 1/10W 1% SMD 0805 T/R	J 3
R918	A11368-40201	402 OHM 1% 0805 RES T/R	J 4
R919	A11368-49911	4.99K 1/10W 1% SMD 0805 T/R	J 3
R920	133871-1	TRIMPOT, 500 OHM TOP ADJ T/R	J 3
R921	A11368-22R11	22.1 OHM 0.1W 1% 0805 T/R	J 3
R922	A11368-20030	RES, 200 KOHM 1/16W 1% 0603	H 5
R923	A11368-10010	RES, 1.0 KOHM 1/16W 1% 0603	H 4
R924	A11368-20030	RES, 200 KOHM 1/16W 1% 0603	H 4
R925	A11368-20011	2.0K, 0.10W 1% MF 0805	H 5
R926	A11368-14021	14KOHM .1W 1% 0805 T/R	H 5
R927	A11368-10020	RES, 10.0 KOHM 1/16W 1% 0603	H 5
R928	A11368-10010	RES, 1.0 KOHM 1/16W 1% 0603	H 5
R929	A11368-30121	30.1K, 0.10W 1% MF 0805	H 5
R930	A11368-10040	RES, 1.00 MOHM 1/16W 1% 0603	H 5
R931	A11368-20030	RES, 200 KOHM 1/16W 1% 0603	H 5
R932	A11368-10010	RES, 1.0 KOHM 1/16W 1% 0603	H 5
R933	A11368-30121	30.1K, 0.10W 1% MF 0805	H 5
R934	A11368-30121	30.1K, 0.10W 1% MF 0805	H 5
R935	A11368-10011	1.KOHM .1W 1% CHIP 0805	H 5
R936	A11368-10030	RES, 100.0 KOHM 1/16W 1% 0603	H 5
R937	A11368-10020	RES, 10.0 KOHM 1/16W 1% 0603	H 5
R938	A11368-20030	RES, 200 KOHM 1/16W 1% 0603	H 5

R939	A11368-10020	RES, 10.0 KOHM 1/16W 1% 0603	H 5
R940	A11368-10030	RES, 100.0 KOHM 1/16W 1% 0603	H 5
R950		OPEN	J 5
R951		OPEN	J 5
R952	A11368-10033	100.KOHM .25W 1% CHIP 1210	K 2
R953	A11368-10033	100.KOHM .25W 1% CHIP 1210	J 2
R956	A11368-10000	RES, 100 OHM 1/16W 1% 0603	J 5
R957	A11368-10010	RES, 1.0 KOHM 1/16W 1% 0603	J 5
R958	A11368-10010	RES, 1.0 KOHM 1/16W 1% 0603	J 5
R963	A11368-60410	6.04 KOHM 1/16W 1% 0603	J 4
R964	A11368-40210	RES, 4.02 KOHM 1/16W 1% 0603	J 4
R965	A11368-10R01	10 OHM .1W 1% 0805 T/R	J 4
R966	A11368-60410	6.04 KOHM 1/16W 1% 0603	I 4
R967	A11368-40210	RES, 4.02 KOHM 1/16W 1% 0603	I 4
R968	A11368-10R01	10 OHM .1W 1% 0805 T/R	J 4
R969	A11368-10000	RES, 100 OHM 1/16W 1% 0603	J 4
R970	A11368-10010	RES, 1.0 KOHM 1/16W 1% 0603	I 3
R971	A11368-24910	RES, 2.49 KOHM 1/16W 1% 0603	I 3
R972	A11368-10010	RES, 1.0 KOHM 1/16W 1% 0603	J 3
R973	A11368-24910	RES, 2.49 KOHM 1/16W 1% 0603	I 3
R974	A11368-10010	RES, 1.0 KOHM 1/16W 1% 0603	J 3
R975		OPEN	I 3
R976	A11368-10010	RES, 1.0 KOHM 1/16W 1% 0603	H 3
R977	A11368-16910	RES, 1.69 KOHM 1/16W 1% 0603	H 3
R978	A11368-10010	RES, 1.0 KOHM 1/16W 1% 0603	H 3
R979	A11368-16910	RES, 1.69 KOHM 1/16W 1% 0603	I 3
R980	A11368-10033	100.KOHM .25W 1% CHIP 1210	K 2
R981	A11368-13320	RES, 13.3K OHM 1/16W 1% 0603	K 2
R982	A11368-10033	100.KOHM .25W 1% CHIP 1210	I 2
R983	A11368-13320	RES, 13.3K OHM 1/16W 1% 0603	J 2
R984	A11368-10010	RES, 1.0 KOHM 1/16W 1% 0603	I 2
R985	A11368-10010	RES, 1.0 KOHM 1/16W 1% 0603	H 4
R986	A11368-10020	RES, 10.0 KOHM 1/16W 1% 0603	L 2
R987	A11368-10020	RES, 10.0 KOHM 1/16W 1% 0603	L 2
R988	A11368-10010	RES, 1.0 KOHM 1/16W 1% 0603	L 2
R989	A11368-10020	RES, 10.0 KOHM 1/16W 1% 0603	I 2
R990	A11368-10020	RES, 10.0 KOHM 1/16W 1% 0603	I 2
R991	A11368-10010	RES, 1.0 KOHM 1/16W 1% 0603	I 2
R992	A11368-43210	4.32 KOHM 1/16W 1% 0603	H 2
R993	A11368-10020	RES, 10.0 KOHM 1/16W 1% 0603	H 2
R994		OPEN	H 4
R996	A11368-10020	RES, 10.0 KOHM 1/16W 1% 0603	I 3
R1000	A11368-17821	17.8 KOHM 1% 0.1W 0805 T/R	M 12
R1001	A11368-68111	6.81K 0.10W 1% CHIP 0805	N 13
R1002	A11368-68111	6.81K 0.10W 1% CHIP 0805	N 12
R1003		OPEN	O 12
R1004	A11368-71531	715K 0.1W 1% 0805 T/R	O 13
R1005	A11368-10041	1M OHM .1W 1% CHIP 0805	O 12
R1006	C10447-8	100.KOHM TOP ADJ TRIMMER T/R	O 12
R1007	132095-1	NTC, 20K J 2% W/CONNECTOR	P 9
R1008	133932-1	RES, 47KOHM 5% 1W RADIAL	N 10
R1009	133932-1	RES, 47KOHM 5% 1W RADIAL	N 10
R1010	A11368-1R004	1 OHM 0.5W 1% 2010 T/R	O 10
R1011	A11368-1R004	1 OHM 0.5W 1% 2010 T/R	O 9
R1012	A11368-20022	20. KOHM .125W 1% CHIP RES T/R	N 10
R1013	A11368-20022	20. KOHM .125W 1% CHIP RES T/R	N 10
R1014	A11368-20022	20. KOHM .125W 1% CHIP RES T/R	N 10
R1015	A11368-20022	20. KOHM .125W 1% CHIP RES T/R	N 10
R1016	A11368-20022	20. KOHM .125W 1% CHIP RES T/R	N 10

R1017	A11368-20022	20. KOHM .125W 1% CHIP RES T/R	N 10
R1018	A11368-20022	20. KOHM .125W 1% CHIP RES T/R	M 10
R1019	A11368-20022	20. KOHM .125W 1% CHIP RES T/R	N 10
R1020	A11368-20022	20. KOHM .125W 1% CHIP RES T/R	M 10
R1021	A11368-20022	20. KOHM .125W 1% CHIP RES T/R	N 10
R1022	133932-1	RES, 47KOHM 5% 1W RADIAL	M 9
R1023	133932-1	RES, 47KOHM 5% 1W RADIAL	M 10
R1024	A11368-1R004	1 OHM 0.5W 1% 2010 T/R	L 10
R1025	A11368-1R004	1 OHM 0.5W 1% 2010 T/R	L 10
R1026	A11371-0R02	0. OHM .125W 5% CHIP RES T/R	L 14
R1027		OPEN	J 12
R1028	A11368-17821	17.8 KOHM 1% 0.1W 0805 T/R	I 12
R1029	A11368-68111	6.81K 0.10W 1% CHIP 0805	J 13
R1030	A11368-68111	6.81K 0.10W 1% CHIP 0805	J 12
R1031		OPEN	K 12
R1032	A11368-71531	715K 0.1W 1% 0805 T/R	K 13
R1033	A11368-10041	1M OHM .1W 1% CHIP 0805	K 12
R1034	C10447-8	100.KOHM TOP ADJ TRIMMER T/R	K 12
R1035	132095-1	NTC, 20K J 2% W/CONNECTOR	J 9
R1036	133932-1	RES, 47KOHM 5% 1W RADIAL	H 10
R1037	133932-1	RES, 47KOHM 5% 1W RADIAL	H 10
R1038	A11368-1R004	1 OHM 0.5W 1% 2010 T/R	I 10
R1039	A11368-1R004	1 OHM 0.5W 1% 2010 T/R	I 9
R1040	A11368-20022	20. KOHM .125W 1% CHIP RES T/R	G 10
R1041	A11368-20022	20. KOHM .125W 1% CHIP RES T/R	G 10
R1042	A11368-20022	20. KOHM .125W 1% CHIP RES T/R	G 10
R1043	A11368-20022	20. KOHM .125W 1% CHIP RES T/R	G 10
R1044	A11368-20022	20. KOHM .125W 1% CHIP RES T/R	G 10
R1045	A11368-20022	20. KOHM .125W 1% CHIP RES T/R	G 10
R1046	A11368-20022	20. KOHM .125W 1% CHIP RES T/R	G 10
R1047	A11368-20022	20. KOHM .125W 1% CHIP RES T/R	G 10
R1048	A11368-20022	20. KOHM .125W 1% CHIP RES T/R	G 10
R1049	A11368-20022	20. KOHM .125W 1% CHIP RES T/R	G 10
R1050	133932-1	RES, 47KOHM 5% 1W RADIAL	G 10
R1051	133932-1	RES, 47KOHM 5% 1W RADIAL	G 10
R1052	A11368-1R004	1 OHM 0.5W 1% 2010 T/R	F 10
R1053	A11368-1R004	1 OHM 0.5W 1% 2010 T/R	F 10
R1054	A11368-10021	10K 1/10W 1% SMD 0805 T/R	G 13
R1055	A11368-10021	10K 1/10W 1% SMD 0805 T/R	G 13
R1057	A11368-10021	10K 1/10W 1% SMD 0805 T/R	G 12
R1058	A11368-10021	10K 1/10W 1% SMD 0805 T/R	G 12
R1059		OPEN	I 13
R1060		OPEN	K 12
R1061		OPEN	O 12
R1062	A11368-49911	4.99K 1/10W 1% SMD 0805 T/R	F 13
R1063	A11368-10021	10K 1/10W 1% SMD 0805 T/R	F 13
R1064	A11368-20021	20.KOHM .1W 1% CHIP 0805	G 13
R1065	A11368-10031	100.KOHM .1W 1% CHIP 0805	O 14
R1066	A11368-40212	4.02KOHM .125W 1% CHIP RES T/R	N 14
R1067	A11368-10011	1.KOHM .1W 1% CHIP 0805	I 12
R1068	A11368-75021	75K 1/10W 1% SMD 0805 T/R	I 12
R1069	A11368-10021	10K 1/10W 1% SMD 0805 T/R	I 12
R1070	A11368-49911	4.99K 1/10W 1% SMD 0805 T/R	I 13
R1071	A11368-10021	10K 1/10W 1% SMD 0805 T/R	H 13
R1072	A11368-10021	10K 1/10W 1% SMD 0805 T/R	H 13
R1073	A11368-10021	10K 1/10W 1% SMD 0805 T/R	I 13
R1074	A11368-20021	20.KOHM .1W 1% CHIP 0805	H 13
R1075	A11368-20031	200K 0.1W 1% SMD CHIP 0805	I 12
R1076	A11368-10021	10K 1/10W 1% SMD 0805 T/R	I 12

R1077	A11368-35721	35.7 KOHM 0.1W 1% 0805 T/R	I 13
R1078	A11368-10031	100.KOHM .1W 1% CHIP 0805	I 12
R1079	A11368-20031	200K 0.1W 1% SMD CHIP 0805	H 12
R1080	A11368-10031	100.KOHM .1W 1% CHIP 0805	I 12
R1081		OPEN	G 12
R1082	A11368-49911	4.99K 1/10W 1% SMD 0805 T/R	G 12
R1083	A11371-0R01	RES, 0 OHM 0805 50 MILOHM MAX	G 13
R1084	A11368-49911	4.99K 1/10W 1% SMD 0805 T/R	O 13
R1085	A11368-49911	4.99K 1/10W 1% SMD 0805 T/R	O 14
R1086		OPEN	G 13
R1087	A11368-51101	RES, 511 OHM 1% 0.1W 0805	O 14
R1088	A11368-80621	80.6 KOHM 0.1W 1% 0805	P 13
R1089	A11368-10021	10K 1/10W 1% SMD 0805 T/R	P 13
R1090	A11368-10021	10K 1/10W 1% SMD 0805 T/R	P 13
R1091	132556-1	RES, 0.68 OHM 5% 2W RADIAL	P 14
R1092	132556-1	RES, 0.68 OHM 5% 2W RADIAL	P 13
R1103	A11368-18202	182 OHM .125W 1% 1206 T/R	M 13
R1104	A11368-18202	182 OHM .125W 1% 1206 T/R	M 13
R1105	A11368-40R21	RES, 40.2 OHM 1% 0.1W SMT 0805	L 12
R1106		OPEN	L 12
R1107		OPEN	L 12
R1108	A11371-2202	22 OHM 1/8W 5% CHIP RES T/R	L 13
R1109		OPEN	L 13
R1110		OPEN	L 13
R1111		OPEN	L 12
R1112	A11368-20011	2.0K, 0.10W 1% MF 0805	L 12
R1113	A11368-10041	1M OHM .1W 1% CHIP 0805	M 12
R1114	A11368-15021	15.0K, 0.10W 1% MF 0805	O 13
R1115	A11368-10031	100.KOHM .1W 1% CHIP 0805	O 13
R1116	A11368-45321	45.3K OHM 0.1W 1% 0805 T/R	O 13
R1117	A11368-78721	78.7KOHM 0.1W 1% 0805 T/R	N 13
R1118	A11368-10001	100 OHM 1% 0805 RES T/R	H 13
R1119	A11368-24911	2.49K 1/10W 1% SMD 0805 T/R	H 13
R1120	A11368-78721	78.7KOHM 0.1W 1% 0805 T/R	H 12
R1121	A11368-80621	80.6 KOHM 0.1W 1% 0805	H 12
R1122	A11368-24911	2.49K 1/10W 1% SMD 0805 T/R	H 12
R1123	A11368-80621	80.6 KOHM 0.1W 1% 0805	H 12
R1124	A11368-78721	78.7KOHM 0.1W 1% 0805 T/R	H 12
R1125	A11371-8235	82K OHM 5% 1W 2512 T/R	F 11
R1126	A11371-8235	82K OHM 5% 1W 2512 T/R	F 12
R1127	A11371-2202	22 OHM 1/8W 5% CHIP RES T/R	M 10
R1128	A11371-2202	22 OHM 1/8W 5% CHIP RES T/R	L 10
R1129	A11371-2202	22 OHM 1/8W 5% CHIP RES T/R	M 10
R1130	A11371-2202	22 OHM 1/8W 5% CHIP RES T/R	K 10
R1131	A11371-2202	22 OHM 1/8W 5% CHIP RES T/R	L 10
R1132	A11371-2202	22 OHM 1/8W 5% CHIP RES T/R	K 10
R1133	A11371-2202	22 OHM 1/8W 5% CHIP RES T/R	N 10
R1134	A11371-2202	22 OHM 1/8W 5% CHIP RES T/R	O 10
R1135	A11371-2202	22 OHM 1/8W 5% CHIP RES T/R	O 10
R1136	A11371-2202	22 OHM 1/8W 5% CHIP RES T/R	N 10
R1137	A11371-2202	22 OHM 1/8W 5% CHIP RES T/R	O 10
R1138	A11371-2202	22 OHM 1/8W 5% CHIP RES T/R	O 10
R1139	A11371-2202	22 OHM 1/8W 5% CHIP RES T/R	O 10
R1140	A11371-2202	22 OHM 1/8W 5% CHIP RES T/R	P 10
R1141	A11371-2202	22 OHM 1/8W 5% CHIP RES T/R	O 10
R1142	A11371-2202	22 OHM 1/8W 5% CHIP RES T/R	P 10
R1143	A11371-2202	22 OHM 1/8W 5% CHIP RES T/R	O 10
R1144	A11371-2202	22 OHM 1/8W 5% CHIP RES T/R	O 10
R1145	A11371-2202	22 OHM 1/8W 5% CHIP RES T/R	E 10

R1146	A11371-2202	22 OHM 1/8W 5% CHIP RES T/R	E 10
R1147	A11371-2202	22 OHM 1/8W 5% CHIP RES T/R	E 10
R1148	A11371-2202	22 OHM 1/8W 5% CHIP RES T/R	E 10
R1149	A11371-2202	22 OHM 1/8W 5% CHIP RES T/R	F 10
R1150	A11371-2202	22 OHM 1/8W 5% CHIP RES T/R	E 10
R1151	A11371-2202	22 OHM 1/8W 5% CHIP RES T/R	I 10
R1152	A11371-2202	22 OHM 1/8W 5% CHIP RES T/R	I 10
R1153	A11371-2202	22 OHM 1/8W 5% CHIP RES T/R	I 10
R1154	A11371-2202	22 OHM 1/8W 5% CHIP RES T/R	H 10
R1155	A11371-2202	22 OHM 1/8W 5% CHIP RES T/R	H 10
R1156	A11371-2202	22 OHM 1/8W 5% CHIP RES T/R	H 10
R1157	A11371-2202	22 OHM 1/8W 5% CHIP RES T/R	G 10
R1158	A11371-2202	22 OHM 1/8W 5% CHIP RES T/R	G 10
R1159	A11371-2202	22 OHM 1/8W 5% CHIP RES T/R	G 10
R1160	A11371-2202	22 OHM 1/8W 5% CHIP RES T/R	F 10
R1161	A11371-2202	22 OHM 1/8W 5% CHIP RES T/R	F 10
R1162	A11371-2202	22 OHM 1/8W 5% CHIP RES T/R	F 10
R1163	A11368-1R004	1 OHM 0.5W 1% 2010 T/R	E 12
R1164	A11368-1R004	1 OHM 0.5W 1% 2010 T/R	E 12
R1165	A11368-1R004	1 OHM 0.5W 1% 2010 T/R	P 12
R1166	A11368-1R004	1 OHM 0.5W 1% 2010 T/R	P 12
R1209	A11368-1R004	1 OHM 0.5W 1% 2010 T/R	J 5
R1210	A11368-10020	RES, 10.0 KOHM 1/16W 1% 0603	I 1
R1211	A11368-10020	RES, 10.0 KOHM 1/16W 1% 0603	I 1
R1212	A11368-10020	RES, 10.0 KOHM 1/16W 1% 0603	I 1
R1213	A11368-49910	RES, 4.99 KOHM 1/16W 1% 0603	I 1
R1214	A11368-10020	RES, 10.0 KOHM 1/16W 1% 0603	I 1
R1215	A11368-49910	RES, 4.99 KOHM 1/16W 1% 0603	I 1
R1216	A11368-10020	RES, 10.0 KOHM 1/16W 1% 0603	I 1
R1217	A11368-49910	RES, 4.99 KOHM 1/16W 1% 0603	I 1
R1218	A11368-10020	RES, 10.0 KOHM 1/16W 1% 0603	I 1
R1219	A11368-10020	RES, 10.0 KOHM 1/16W 1% 0603	I 1
R1220	A11368-10010	RES, 1.0 KOHM 1/16W 1% 0603	K 1
R1221	A11368-10010	RES, 1.0 KOHM 1/16W 1% 0603	J 1
R1222	A11368-40210	RES, 4.02 KOHM 1/16W 1% 0603	K 1
R1223	A11368-33210	RES, 3.32 KOHM 1/16W 1% 0603	J 1
R1224	A11368-10010	RES, 1.0 KOHM 1/16W 1% 0603	K 2
R1225	A11368-10010	RES, 1.0 KOHM 1/16W 1% 0603	K 2
R1226	A11368-75010	RES, 7.50 KOHM 1/16W 1% 0603	K 2
S2		OPEN	C 15
T300		OPEN	D 4
T300X	136935-1	PS I SENSE XFMR, OUTPUT FILTER	D 4
T301	131233-1	XFMR,100:1 CURRSNSR LO PROFILE	B 6
T302	131233-1	XFMR,100:1 CURRSNSR LO PROFILE	D 6
TC1		OPEN	K 15
TC2		OPEN	K 15*
TJ1000	137164-1	HEADER, 14PIN .1X.1 PIN8 VOID	I 13
TP300		OPEN	D 3
TP301		OPEN	C 3
TP302		OPEN	C 3
TP303	127064-1	TEST POINT, SMT 1206	A 1
TP304	127064-1	TEST POINT, SMT 1206	A 7
TP305		OPEN	E 3
TP306		OPEN	F 3
TP307		OPEN	E 3
TP308	127064-1	TEST POINT, SMT 1206	G 1
TP309	127064-1	TEST POINT, SMT 1206	A 8
TP310	127064-1	TEST POINT, SMT 1206	D 7
TP311	127064-1	TEST POINT, SMT 1206	G 4

TP500		OPEN	I 7
TP500X		OPEN	O 7
TP501		OPEN	I 7
TP501X		OPEN	O 7
TP502	127064-1	TEST POINT, SMT 1206	J 7
TP502X	127064-1	TEST POINT, SMT 1206	P 7
TP503		OPEN	J 7
TP503X		OPEN	P 7
TP504		OPEN	F 7
TP504X		OPEN	L 7
TP505		OPEN	E 7
TP505X		OPEN	K 7
TP506	127064-1	TEST POINT, SMT 1206	E 7
TP506X	127064-1	TEST POINT, SMT 1206	K 7
TP507		OPEN	E 7
TP507X		OPEN	K 7
TP800		OPEN	I 2
TP801		OPEN	K 5
TP802		OPEN	H 2
TP803		OPEN	L 3
TP804		OPEN	H 3
TP805		OPEN	H 2
TP806		OPEN	L 4
TP807		OPEN	H 2
TP808		OPEN	H 2
TP811		OPEN	L 3
TP812		OPEN	L 2
TP813		OPEN	H 3
TP814		OPEN	H 2
TP815		OPEN	K 2
TP816		OPEN	I 2
TP817		OPEN	H 4
TP818		OPEN	K 5
TP819		OPEN	I 4
TP820		OPEN	H 4
TP821		OPEN	I 4
TP824		OPEN	K 3
TP825		OPEN	K 3
TP826		OPEN	J 3
TP827		OPEN	I 3
TP828		OPEN	I 3
TP829		OPEN	I 3
TP830		OPEN	I 3
TP831		OPEN	H 3
TP832		OPEN	I 3
TP833		OPEN	J 2
TP842		OPEN	I 2
TP844		OPEN	J 4
TP845		OPEN	I 4
TP847	127064-1	TEST POINT, SMT 1206	K 4
TP848	127064-1	TEST POINT, SMT 1206	H 4
TP849		OPEN	I 2
TP853		OPEN	H 3
TP1000		OPEN	N 13
TP1001	127064-1	TEST POINT, SMT 1206	M 13
TP1002	127064-1	TEST POINT, SMT 1206	N 13
TP1003	127064-1	TEST POINT, SMT 1206	O 13
TP1004	127064-1	TEST POINT, SMT 1206	O 13
TP1006		OPEN	F 13

TP1008	127064-1	TEST POINT, SMT 1206	F 14
TP1010	127064-1	TEST POINT, SMT 1206	F 14
TP1011	127064-1	TEST POINT, SMT 1206	F 14
TP1013		OPEN	F 13
TP1014		OPEN	O 13
TP1015		OPEN	M 14
TP1016	127064-1	TEST POINT, SMT 1206	O 13
TP1017	127064-1	TEST POINT, SMT 1206	L 14
TP1018	127064-1	TEST POINT, SMT 1206	G 12
TP1019	127064-1	TEST POINT, SMT 1206	M 13
U300	C10494-0	HCPL2631 HI SPEED OPTOCOUPLER	D 3
U301	126559-1	COMPARATOR, LM393 SO-8 DUAL	D 3
U302	133890-1	REG, +5V D2PAK	D 4
U303	126559-1	COMPARATOR, LM393 SO-8 DUAL	E 3
U500	131048-1	DVR, IR2117S SMT MOS GATE S0-8	I 7
U500X	131048-1	DVR, IR2117S SMT MOS GATE S0-8	O 7
U501	131048-1	DVR, IR2117S SMT MOS GATE S0-8	F 7
U501X	131048-1	DVR, IR2117S SMT MOS GATE S0-8	L 7
U800	C 8262-5	MC33078D LOW NOISE DUAL OP AMP	K 4
U802	C 8262-5	MC33078D LOW NOISE DUAL OP AMP	L 3
U803	C 8262-5	MC33078D LOW NOISE DUAL OP AMP	J 3
U804	136936-1	IC, 74ACT244 TSSOP-20	H 4
U807	134835-1	OP AMP,OP07 LOW OFFSET SO8	K 3
U808	126559-1	COMPARATOR, LM393 SO-8 DUAL	K 3
U809	C 8262-5	MC33078D LOW NOISE DUAL OP AMP	L 2
U810	C 8262-5	MC33078D LOW NOISE DUAL OP AMP	I 5
U811	C 9038-8	COMPARATOR, QUAD LM339D SO-14	I 5
U814	134835-1	OP AMP,OP07 LOW OFFSET SO8	K 2
U815	C 8262-5	MC33078D LOW NOISE DUAL OP AMP	J 2
U816	C 8262-5	MC33078D LOW NOISE DUAL OP AMP	H 5
U817	C 9038-8	COMPARATOR, QUAD LM339D SO-14	H 5
U819	131262-1	CONV, A/D SERIAL 8CH 10BIT SMT	H 3
U821	131410-1	VOLT REG, 3.3V SOT-23 50MA	H 2
U822	136623-2	PLD, EPM3032ALC44-10 PROG	H 2
U823	C 8262-5	MC33078D LOW NOISE DUAL OP AMP	J 1
U825	C 8262-5	MC33078D LOW NOISE DUAL OP AMP	I 4
U826	102484-1	REG +15V D2PAK 2.25W	L 4
U827	102485-1	REG -15V D2PAK 2.25W	L 5
U828	126559-1	COMPARATOR, LM393 SO-8 DUAL	K 1
U1000	138465-1	PRP, 136953-1 (2940) BLU .300	O 14
U1001	138502-1	PRP, 136961-1 (2990) GRN .300	O 14
U1002	138465-1	PRP, 136953-1 (2940) BLU .300	N 14
U1003	138502-1	PRP, 136961-1 (2990) GRN .300	N 14
U1004	C 9012-3	OP AMP, QUAD LO NOISE MC33079D	H 13
U1005	C 9038-8	COMPARATOR, QUAD LM339D SO-14	N 14
U1006	C 9038-8	COMPARATOR, QUAD LM339D SO-14	H 12
U1007	126540-1	IC,QUAD 2 INPUT NOR GATE SO-14	L 13
U1008	C 9898-5	78L05ACM 5V 5%RES SO-8 SMT	L 13
U1009	125867-1	MC74HC4024D 7 STAGE COUNTER SM	L 13
W1A	137077-1	WIRE, 4.8" 12GA WHT NMS OUTPUT	B 8
W1B		OPEN	B 10
W2A	137078-1	WIRE, 4.8" 12GA BLK NMS OUTPUT	B 8
W2B		OPEN	B 10
W3A	137079-2	WIRE, 6.15" 12GA BLK NMS OUTPUT	D 7
W3B		OPEN	B 11
W4A	137080-1	WIRE, 6.4" 12GA WHT NMS OUTPUT	D 8
W4B		OPEN	C 10
Y1000	131114-1	CRYSTAL, 4MHZ SMD	M 12

REVISION HISTORY						
E.C.N	REV	DESCRIPTION	DATE	DWN	PE	CM
	A	INITIAL RELEASE DERIVED FROM 137101-10 REV. 3 WITH CHANGES. C13 & C14 WERE 137455-1	01/29/07	KLW	BP	KZ
34869	B	CHANGE C13 AND C14 FROM 137455-1 TO OPEN	08/21/07	JFL	GET	DSV

UNLESS OTHERWISE SPECIFIED, THIS PRINTED WIRING ASSEMBLY SHALL MEET THE SPECIFICATION DESCRIBED IN IPC-A-610_ CLASS 2 STANDARDS.

ROHS COMPLIANCE: THIS PART MUST COMPLY WITH CROWN AUDIO SPECIFICATION 138935 AND ROHS DIRECTIVE 2002/95/EC OR BE DEFINED AS A ROHS APPROVED EXCEPTION.

NOTES:
1. PRINTED WIRING BOARD PART NUMBER 136542-10.
2. SEE 137101-10_B.TIF FOR SCHEMATIC AND BOARD MAP
3. ALL LEADS SHALL BE TRIMMED TO 0.125" OR LESS.
4. POSITION COMPONENTS AS SHOWN ON COMPONENT MAP.
5. THE PRINTED WIRING ASSEMBLY PART NUMBER FOR THIS ASSEMBLY SHALL BE MARKED ON THE PRINTED WIRING BOARD AND SHALL BE PERMANENT.
6. ATTACH CIRCUIT BREAKER (136851-1) TO WIRES WP1 AND WP2.
   WP1 MUST BE CONNECTED TO THE "ON" SIDE OF THE CIRCUIT BREAKER AND
   WP2 MUST BE CONNECTED TO THE "OFF" SIDE OF THE CIRCUIT BREAKER.
7. ON FASTON TABS, CPN 101031-1, THE COMPONENT SIDE MUST HAVE A MINIMUM OF 50% OF THE ORIGINAL LAND COVERED WITH WETTED SOLDER. THIS IS IN ADDITION TO THE IPC-A-610 REQUIREMENTS.

PWA BOARD IDENTIFIER AND DESCRIPTION		REF. DES. RANGE
A	POWER SUPPLY MAIN	21-99
B	EMI FILTER / LVPS	1-21 EXCEPT CAPS WHICH END AT C34
C	POWER SUPPLY CONTROL	100-250
D	PS GATE DRIVE CHANNEL 1	1300-1324
E	PS GATE DRIVE CHANNEL 2	1300X-1324X

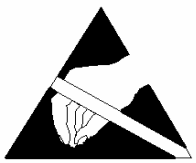

CAUTION

STATIC CAN DAMAGE COMPONENTS!

DO NOT HANDLE

UNLESS WRIST STRAP IS WORN

UNCONTROLLED
UNLESS OTHERWISE MARKED IN RED INK BY CM AS A CONTROLLED COPY, COPIES OF THESE DOCUMENTS INCLUDING ASSOCIATED ELECTRONIC REPRODUCTIONS ARE FOR REFERENCE ONLY

THESE DRAWINGS AND SPECIFICATIONS ARE THE PROPERTY OF CROWN INTERNATIONAL, INC. AND SHALL NOT BE REPRODUCED, COPIED, OR USED AS THE BASIS FOR THE MANUFACTURE OR SALE OF APPARATUS OR DEVICES WITHOUT PERMISSION.

DWN	KLW	01/29/07	PE	BP	01/29/07	CM	KZ	07/30/07		DIST.	K		

REF. DES.	CPN	DESCRIPTION	MAP LOC.
C1	137030-1	CAP, 1UF X2 REDUCED SIZE	A 3
C2	137030-1	CAP, 1UF X2 REDUCED SIZE	B 1
C3	137030-1	CAP, 1UF X2 REDUCED SIZE	B 4
C4	137030-1	CAP, 1UF X2 REDUCED SIZE	A 2
C5	137030-1	CAP, 1UF X2 REDUCED SIZE	F 2
C6	137030-1	CAP, 1UF X2 REDUCED SIZE	G 1
C7	137030-1	CAP, 1UF X2 REDUCED SIZE	C 2
C8	137030-1	CAP, 1UF X2 REDUCED SIZE	D 1
C9	137030-1	CAP, 1UF X2 REDUCED SIZE	C 3
C10	137030-1	CAP, 1UF X2 REDUCED SIZE	D 4
C11	137455-1	CAP, 4700 PF 10% FILM Y2	C 4
C12	137455-1	CAP, 4700 PF 10% FILM Y2	C 1
C13		OPEN	F 4
C14		OPEN	F 1
C15	137030-1	CAP, 1UF X2 REDUCED SIZE	F 3
C18	136819-1	CAP, 100UF 400V HIGH RIPPLE	C 5
C19	A11369-332J5	CAP, 3300PF 5% 50V SMT 1206	D 5
C20	137030-1	CAP, 1UF X2 REDUCED SIZE	G 4
C21	131787-1	CAP, 0.068UF 50V 5% METAL FILM	D 5
C22	A11369-122J2	0.0012UF 50V 5% NPO MLC 0805	D 5
C23	137451-1	CAP,.047UF 630V POLYPROPYLENE	D 5
C24	132042-1	CAP, 100UF 35V ALUM ELECT SMT	C 5
C25	A11427-104K2	.1UF 50V CHIP CAP 10% 0805 X7R	C 5
C26	137451-1	CAP,.047UF 630V POLYPROPYLENE	D 5
C27	A11427-104K2	.1UF 50V CHIP CAP 10% 0805 X7R	F 5
C28	A11427-104K2	.1UF 50V CHIP CAP 10% 0805 X7R	F 5
C29	125714-1	330UF 35V 20% ALUM ELEC SMT TR	F 6
C30	125714-1	330UF 35V 20% ALUM ELEC SMT TR	F 5
C31	137455-1	CAP, 4700 PF 10% FILM Y2	F 5
C32	137455-1	CAP, 4700 PF 10% FILM Y2	E 5
C33	A11427-104K2	.1UF 50V CHIP CAP 10% 0805 X7R	F 4
C34	137455-1	CAP, 4700 PF 10% FILM Y2	E 4
C35	137455-1	CAP, 4700 PF 10% FILM Y2	I 3
C36	137455-1	CAP, 4700 PF 10% FILM Y2	I 2
C38	136727-1	CAP, 0.33UF 1000V POLYPROP	M 8
C39	136727-1	CAP, 0.33UF 1000V POLYPROP	L 8
C40	136727-1	CAP, 0.33UF 1000V POLYPROP	L 8
C41		OPEN	K 8
C42	136727-1	CAP, 0.33UF 1000V POLYPROP	K 7
C43	136727-1	CAP, 0.33UF 1000V POLYPROP	L 7
C44		OPEN	J 7
C45	136727-1	CAP, 0.33UF 1000V POLYPROP	L 7
C46	131312-1	0.01UF 400V 5% MET POLY RAD	K 9
C47	131312-1	0.01UF 400V 5% MET POLY RAD	K 8
C54	138500-1	PRP, 137223-1 4700UF 25V .125	I 10
C55	A11427-104K2	.1UF 50V CHIP CAP 10% 0805 X7R	I 10
C56	138504-1	PRP, 137217-1 2200UF 25V .125	H 10
C57	A11427-104K2	.1UF 50V CHIP CAP 10% 0805 X7R	I 9
C58	136726-2	CAP,1200UF 220VDC PC MNT ELECT	I 11
C59	A10434-104JD	.1UF 250V 5% MTL POLY FILM T/A	H 10
C61	136726-2	CAP,1200UF 220VDC PC MNT ELECT	H 11
C62	A10434-104JD	.1UF 250V 5% MTL POLY FILM T/A	H 10
C64	138510-1	PRP, C10326-4 .1UF 250VX2.125	G 8
C65	138510-1	PRP, C10326-4 .1UF 250VX2.125	G 7
C66	138510-1	PRP, C10326-4 .1UF 250VX2.125	H 7
C67	138510-1	PRP, C10326-4 .1UF 250VX2.125	I 7

C68	136735-1	CAP, 3.3UF 630VDC POLYPROP	B 7
C69	136735-1	CAP, 3.3UF 630VDC POLYPROP	D 7
C70	136735-1	CAP, 3.3UF 630VDC POLYPROP	F 7
C72	137451-1	CAP,.047UF 630V POLYPROPYLENE	C 8
C73	A11369-102J2	.001UF 50V 5% NPO MLC 0805 T/R	A 11
C79	136727-1	CAP, 0.33UF 1000V POLYPROP	N 8
C80	136727-1	CAP, 0.33UF 1000V POLYPROP	M 7
C81	137451-1	CAP,.047UF 630V POLYPROPYLENE	D 7
C84	137451-1	CAP,.047UF 630V POLYPROPYLENE	D 11
C87	137451-1	CAP,.047UF 630V POLYPROPYLENE	C 11
C101	A11369-102J2	.001UF 50V 5% NPO MLC 0805 T/R	J 5
C102	A11369-102J2	.001UF 50V 5% NPO MLC 0805 T/R	J 5
C103	A11369-102J2	.001UF 50V 5% NPO MLC 0805 T/R	J 5
C104	A11369-102J2	.001UF 50V 5% NPO MLC 0805 T/R	J 5
C105	A11369-102J2	.001UF 50V 5% NPO MLC 0805 T/R	J 6
C106	A11369-102J2	.001UF 50V 5% NPO MLC 0805 T/R	H 6
C107	A11369-102F2	1000PF 50V 1% CHIP CAP	H 5
C109	135505-1	CAP, 0.1UF 25V 10% X7R 0603	G 5
C110	135505-1	CAP, 0.1UF 25V 10% X7R 0603	G 5
C111	135505-1	CAP, 0.1UF 25V 10% X7R 0603	G 5
C112	A11369-102J2	.001UF 50V 5% NPO MLC 0805 T/R	K 5
C113	A11369-103K2	.01MF 50V 10% CHIP NPO MLC	K 5
C114	A11369-102J2	.001UF 50V 5% NPO MLC 0805 T/R	K 5
C115	A11369-103K2	.01MF 50V 10% CHIP NPO MLC	L 5
C116	A11369-102J2	.001UF 50V 5% NPO MLC 0805 T/R	L 5
C117	A11369-102J2	.001UF 50V 5% NPO MLC 0805 T/R	L 5
C118	A11369-102J2	.001UF 50V 5% NPO MLC 0805 T/R	L 6
C119	126539-1	10UF 16V 5.5MM HIGH SMD	L 6
C120	A11369-102J2	.001UF 50V 5% NPO MLC 0805 T/R	L 5
C121	A11369-103K2	.01MF 50V 10% CHIP NPO MLC	I 5
C122	135505-1	CAP, 0.1UF 25V 10% X7R 0603	K 5
C123	A11369-102J2	.001UF 50V 5% NPO MLC 0805 T/R	K 5
C124	A11369-102J2	.001UF 50V 5% NPO MLC 0805 T/R	I 5
C125	A11369-100J2	CAP, 10PF 5% 50V SMT 0805	M 5
C126	135505-1	CAP, 0.1UF 25V 10% X7R 0603	L 4
C127	135505-1	CAP, 0.1UF 25V 10% X7R 0603	L 5
C128	103418-103J2	.01UF 5% 100V X7R 0805	M 5
C129		OPEN	H 5
C130	135505-1	CAP, 0.1UF 25V 10% X7R 0603	K 5
C131	126542-1	2.2UF 50V 5.5MM HIGH SMD	H 6
C132	135505-1	CAP, 0.1UF 25V 10% X7R 0603	H 6
C133	126539-1	10UF 16V 5.5MM HIGH SMD	H 6
C134	126542-1	2.2UF 50V 5.5MM HIGH SMD	M 5
C135	135505-1	CAP, 0.1UF 25V 10% X7R 0603	M 4
C136	132042-1	CAP, 100UF 35V ALUM ELECT SMT	N 5
C137	126542-1	2.2UF 50V 5.5MM HIGH SMD	N 5
C138	135505-1	CAP, 0.1UF 25V 10% X7R 0603	M 6
C139	132042-1	CAP, 100UF 35V ALUM ELECT SMT	M 5
C142	A11369-470K1	CAP, 47PF 50V 10% NPO 0603 T/R	J 5
C143	A11369-470K1	CAP, 47PF 50V 10% NPO 0603 T/R	J 5
C144	135505-1	CAP, 0.1UF 25V 10% X7R 0603	J 5
C145	135505-1	CAP, 0.1UF 25V 10% X7R 0603	J 6
C146	135505-1	CAP, 0.1UF 25V 10% X7R 0603	J 5
C147	135505-1	CAP, 0.1UF 25V 10% X7R 0603	I 6
C148	135505-1	CAP, 0.1UF 25V 10% X7R 0603	I 6
C149	135505-1	CAP, 0.1UF 25V 10% X7R 0603	K 5
C150	135505-1	CAP, 0.1UF 25V 10% X7R 0603	L 5
C151	135505-1	CAP, 0.1UF 25V 10% X7R 0603	L 6
C152	135505-1	CAP, 0.1UF 25V 10% X7R 0603	H 5

C153	135505-1	CAP, 0.1UF 25V 10% X7R 0603	H 5
C154	A11369-103K2	.01MF 50V 10% CHIP NPO MLC	M 5
C155	A11369-103K2	.01MF 50V 10% CHIP NPO MLC	L 5
C156	135505-1	CAP, 0.1UF 25V 10% X7R 0603	K 5
C157	A11427-104K2	.1UF 50V CHIP CAP 10% 0805 X7R	L 5
C158	A11369-102J2	.001UF 50V 5% NPO MLC 0805 T/R	I 5
C162	A11369-102J2	.001UF 50V 5% NPO MLC 0805 T/R	K 5
C163	135505-1	CAP, 0.1UF 25V 10% X7R 0603	K 6
C164	A11369-103K2	.01MF 50V 10% CHIP NPO MLC	K 5
C165	A11369-330J1	CAP, 33PF 50V NPO 5% 0603	I 4
C167	A11369-101J2	100 PF 50V 5% NPO MLC 0805 T/R	G 5
C168	A11369-102J2	.001UF 50V 5% NPO MLC 0805 T/R	I 5
C169	A11369-102J2	.001UF 50V 5% NPO MLC 0805 T/R	I 5
C170	135505-1	CAP, 0.1UF 25V 10% X7R 0603	H 5
C171	128113-1	CAP, 0.1UF 16V FILM 1210 SMD	I 5
C172	A11369-100J2	CAP, 10PF 5% 50V SMT 0805	K 6
C173	A11369-102J2	.001UF 50V 5% NPO MLC 0805 T/R	I 5
C174	135505-1	CAP, 0.1UF 25V 10% X7R 0603	I 6
C175	A11369-100J2	CAP, 10PF 5% 50V SMT 0805	J 5
C176	A11369-100J2	CAP, 10PF 5% 50V SMT 0805	J 6
C177	A11369-221J1	CAP, 220PF 50V 5% NPO 0603 T/R	J 6
C178	A11369-221J1	CAP, 220PF 50V 5% NPO 0603 T/R	I 5
C179	A11369-102J2	.001UF 50V 5% NPO MLC 0805 T/R	I 5
C180	135505-1	CAP, 0.1UF 25V 10% X7R 0603	K 5
C181	A11369-103K2	.01MF 50V 10% CHIP NPO MLC	K 5
C182	A11369-100J2	CAP, 10PF 5% 50V SMT 0805	L 5
C183	A11369-100J2	CAP, 10PF 5% 50V SMT 0805	L 6
C184	135505-1	CAP, 0.1UF 25V 10% X7R 0603	K 5
C185	A11369-102J2	.001UF 50V 5% NPO MLC 0805 T/R	K 5
C186	135505-1	CAP, 0.1UF 25V 10% X7R 0603	K 5
C187	135505-1	CAP, 0.1UF 25V 10% X7R 0603	K 6
C188	135505-1	CAP, 0.1UF 25V 10% X7R 0603	I 5
C189	135505-1	CAP, 0.1UF 25V 10% X7R 0603	I 5
C190	135505-1	CAP, 0.1UF 25V 10% X7R 0603	K 6
C191	135505-1	CAP, 0.1UF 25V 10% X7R 0603	H 5
C192	138196-1	CAP, 10UF X7R 10% 25V 1210 T/R	M 5
C194	135505-1	CAP, 0.1UF 25V 10% X7R 0603	J 5
C195	135505-1	CAP, 0.1UF 25V 10% X7R 0603	L 5
C196	135505-1	CAP, 0.1UF 25V 10% X7R 0603	M 5
C197	135505-1	CAP, 0.1UF 25V 10% X7R 0603	L 4
C198	135505-1	CAP, 0.1UF 25V 10% X7R 0603	L 4
C199	135505-1	CAP, 0.1UF 25V 10% X7R 0603	L 4
C1300	A11427-104K2	.1UF 50V CHIP CAP 10% 0805 X7R	O 4
C1300X	A11427-104K2	.1UF 50V CHIP CAP 10% 0805 X7R	O 9
C1301	126539-1	10UF 16V 5.5MM HIGH SMD	O 4
C1301X	126539-1	10UF 16V 5.5MM HIGH SMD	O 9
C1302	A11369-270K2	27PF 50V 10% NPO 0805 T/R	P 5
C1302X	A11369-270K2	27PF 50V 10% NPO 0805 T/R	P 10
C1303	A11369-680J2	CAP, 68PF 5% 50V SMT 0805	P 4
C1303X	A11369-680J2	CAP, 68PF 5% 50V SMT 0805	P 10
C1304	A11427-104K2	.1UF 50V CHIP CAP 10% 0805 X7R	O 5
C1304X	A11427-104K2	.1UF 50V CHIP CAP 10% 0805 X7R	O 10
C1305	A11427-104K2	.1UF 50V CHIP CAP 10% 0805 X7R	O 5
C1305X	A11427-104K2	.1UF 50V CHIP CAP 10% 0805 X7R	O 10
C1306	A11427-104K2	.1UF 50V CHIP CAP 10% 0805 X7R	O 4
C1306X	A11427-104K2	.1UF 50V CHIP CAP 10% 0805 X7R	O 10
C1307	A11427-104K2	.1UF 50V CHIP CAP 10% 0805 X7R	O 1
C1307X	A11427-104K2	.1UF 50V CHIP CAP 10% 0805 X7R	O 7
C1308	126539-1	10UF 16V 5.5MM HIGH SMD	O 2

C1308X	126539-1	10UF 16V 5.5MM HIGH SMD	O 8
C1309	A11369-270K2	27PF 50V 10% NPO 0805 T/R	P 2
C1309X	A11369-270K2	27PF 50V 10% NPO 0805 T/R	P 8
C1310	A11369-680J2	CAP, 68PF 5% 50V SMT 0805	P 2
C1310X	A11369-680J2	CAP, 68PF 5% 50V SMT 0805	P 8
C1311	A11427-104K2	.1UF 50V CHIP CAP 10% 0805 X7R	O 2
C1311X	A11427-104K2	.1UF 50V CHIP CAP 10% 0805 X7R	O 8
C1312	A11427-104K2	.1UF 50V CHIP CAP 10% 0805 X7R	O 2
C1312X	A11427-104K2	.1UF 50V CHIP CAP 10% 0805 X7R	O 7
C1313	A11427-104K2	.1UF 50V CHIP CAP 10% 0805 X7R	O 1
C1313X	A11427-104K2	.1UF 50V CHIP CAP 10% 0805 X7R	O 7
C1314	A11369-102J2	.001UF 50V 5% NPO MLC 0805 T/R	O 3
C1314X	A11369-102J2	.001UF 50V 5% NPO MLC 0805 T/R	O 9
C1315	A11369-680J2	CAP, 68PF 5% 50V SMT 0805	O 3
C1315X	A11369-680J2	CAP, 68PF 5% 50V SMT 0805	O 8
C1316	A11427-104K2	.1UF 50V CHIP CAP 10% 0805 X7R	P 3
C1316X	A11427-104K2	.1UF 50V CHIP CAP 10% 0805 X7R	P 9
C1317	132042-1	CAP, 100UF 35V ALUM ELECT SMT	P 3
C1317X	132042-1	CAP, 100UF 35V ALUM ELECT SMT	P 9
C1318	A11369-680J2	CAP, 68PF 5% 50V SMT 0805	O 3
C1318X	A11369-680J2	CAP, 68PF 5% 50V SMT 0805	O 9
C1319	A11369-102J2	.001UF 50V 5% NPO MLC 0805 T/R	O 3
C1319X	A11369-102J2	.001UF 50V 5% NPO MLC 0805 T/R	O 9
CB1	136851-1	CIRCUIT BREAKER/SWITCH, 50A	A 5
D1	136817-1	DIODE, BRIDGE, 1A 600V SMD	E 4
D2	126620-1	DIODE, 600V 1A SMB ULTRAFAST	D 6
D3	C 9283-0	DIODE, MMBD4148/914 SOT-23 SMT	D 5
D4	125255-1	DIODE, ULTRAFAST 200V 1A SMA	E 5
D5	125255-1	DIODE, ULTRAFAST 200V 1A SMA	E 5
D6	C10144-1	DIODE, ZENER 15V SOT-23	D 5
D7	126621-1	DIODE, 180V 3W SMB ZENER	D 6
D8	C 9283-0	DIODE, MMBD4148/914 SOT-23 SMT	D 5
D9	C 9283-0	DIODE, MMBD4148/914 SOT-23 SMT	D 5
D21		OPEN	A 9
D21X		OPEN	A 9
D22	138496-1	PRP, 136292-1(D30E60) .250	B 9
D22X	136330-1	CLIP, TO-220	B 9
D23	138496-1	PRP, 136292-1(D30E60) .250	B 9
D23X	136330-1	CLIP, TO-220	B 9
D24	138496-1	PRP, 136292-1(D30E60) .250	C 9
D24X	136330-1	CLIP, TO-220	C 9
D25	138496-1	PRP, 136292-1(D30E60) .250	C 9
D25X	136330-1	CLIP, TO-220	C 9
D26		OPEN	C 9
D26X		OPEN	C 9
D27		OPEN	D 9
D27X		OPEN	D 9
D28	138496-1	PRP, 136292-1(D30E60) .250	D 9
D28X	136330-1	CLIP, TO-220	D 9
D29	138496-1	PRP, 136292-1(D30E60) .250	E 9
D29X	136330-1	CLIP, TO-220	E 9
D30	138496-1	PRP, 136292-1(D30E60) .250	E 9
D30X	136330-1	CLIP, TO-220	E 9
D31	138496-1	PRP, 136292-1(D30E60) .250	F 9
D31X	136330-1	CLIP, TO-220	F 9
D32		OPEN	F 9
D32X		OPEN	F 9
D33		OPEN	A 9
D33X		OPEN	A 9

D34	138496-1	PRP, 136292-1(D30E60) .250	B 9
D34X	136330-1	CLIP, TO-220	B 9
D35	138496-1	PRP, 136292-1(D30E60) .250	B 9
D35X	136330-1	CLIP, TO-220	B 9
D36	138496-1	PRP, 136292-1(D30E60) .250	C 9
D36X	136330-1	CLIP, TO-220	C 9
D37	138496-1	PRP, 136292-1(D30E60) .250	C 9
D37X	136330-1	CLIP, TO-220	C 9
D38		OPEN	C 9
D38X		OPEN	C 9
D39		OPEN	D 9
D39X		OPEN	D 9
D40	138496-1	PRP, 136292-1(D30E60) .250	D 9
D40X	136330-1	CLIP, TO-220	D 9
D41	138496-1	PRP, 136292-1(D30E60) .250	E 9
D41X	136330-1	CLIP, TO-220	E 9
D42	138496-1	PRP, 136292-1(D30E60) .250	E 9
D42X	136330-1	CLIP, TO-220	E 9
D43	138496-1	PRP, 136292-1(D30E60) .250	F 9
D43X	136330-1	CLIP, TO-220	F 9
D44		OPEN	F 9
D44X		OPEN	F 9
D45		OPEN	A 8
D46	C 9283-0	DIODE, MMBD4148/914 SOT-23 SMT	B 8
D47	C 9283-0	DIODE, MMBD4148/914 SOT-23 SMT	B 8
D48	C 9283-0	DIODE, MMBD4148/914 SOT-23 SMT	B 8
D49	C 9283-0	DIODE, MMBD4148/914 SOT-23 SMT	C 8
D50		OPEN	C 8
D51		OPEN	D 8
D52	C 9283-0	DIODE, MMBD4148/914 SOT-23 SMT	D 8
D53	C 9283-0	DIODE, MMBD4148/914 SOT-23 SMT	E 8
D54	C 9283-0	DIODE, MMBD4148/914 SOT-23 SMT	E 8
D55	C 9283-0	DIODE, MMBD4148/914 SOT-23 SMT	E 8
D56		OPEN	F 8
D57		OPEN	A 10
D58	C 9283-0	DIODE, MMBD4148/914 SOT-23 SMT	B 10
D59	C 9283-0	DIODE, MMBD4148/914 SOT-23 SMT	B 10
D60	C 9283-0	DIODE, MMBD4148/914 SOT-23 SMT	C 10
D61	C 9283-0	DIODE, MMBD4148/914 SOT-23 SMT	C 10
D62		OPEN	C 10
D63		OPEN	D 10
D64	C 9283-0	DIODE, MMBD4148/914 SOT-23 SMT	D 10
D65	C 9283-0	DIODE, MMBD4148/914 SOT-23 SMT	E 10
D66	C 9283-0	DIODE, MMBD4148/914 SOT-23 SMT	E 10
D67	C 9283-0	DIODE, MMBD4148/914 SOT-23 SMT	F 10
D68		OPEN	F 10
D69	138499-1	PRP, 136294-1 (P30-06BR) .325	I 9
D69X	136330-1	CLIP, TO-220	I 9
D70	138499-1	PRP, 136294-1 (P30-06BR) .325	H 9
D70X	136330-1	CLIP, TO-220	H 9
D71	138499-1	PRP, 136294-1 (P30-06BR) .325	H 9
D71X	136330-1	CLIP, TO-220	H 9
D72	138499-1	PRP, 136294-1 (P30-06BR) .325	G 10
D72X	136330-1	CLIP, TO-220	G 9
D73	134827-1	DIODE, SCHOTTKY 100V 3A SMC	I 9
D74	134827-1	DIODE, SCHOTTKY 100V 3A SMC	I 10
D75	134827-1	DIODE, SCHOTTKY 100V 3A SMC	I 10
D76	134827-1	DIODE, SCHOTTKY 100V 3A SMC	I 10
D77	138498-1	PRP, 136293-1 (DSI4516AR).325	G 8

D77X	136330-1	CLIP, TO-220	G 8
D78	138498-1	PRP, 136293-1 (DSI4516AR).325	H 7
D78X	136330-1	CLIP, TO-220	H 7
D79	138498-1	PRP, 136293-1 (DSI4516AR).325	G 7
D79X	136330-1	CLIP, TO-220	H 8
D80	138498-1	PRP, 136293-1 (DSI4516AR).325	I 7
D80X	136330-1	CLIP, TO-220	I 7
D101	137118-1	DIODE, 30V 200mA DUAL SCHOTTKY	J 5
D102	137118-1	DIODE, 30V 200mA DUAL SCHOTTKY	J 6
D104	137118-1	DIODE, 30V 200mA DUAL SCHOTTKY	K 6
D107	137118-1	DIODE, 30V 200mA DUAL SCHOTTKY	L 6
D109	137118-1	DIODE, 30V 200mA DUAL SCHOTTKY	L 6
D110	C 9773-0	DIODE, ZENER 5.1V 1N5231 SMT	L 5
D111	C 9283-0	DIODE, MMBD4148/914 SOT-23 SMT	M 5
D112	C 9283-0	DIODE, MMBD4148/914 SOT-23 SMT	K 5
D113	137118-1	DIODE, 30V 200mA DUAL SCHOTTKY	I 5
D114	137118-1	DIODE, 30V 200mA DUAL SCHOTTKY	I 5
D115	C 9283-0	DIODE, MMBD4148/914 SOT-23 SMT	L 5
D116	137118-1	DIODE, 30V 200mA DUAL SCHOTTKY	J 6
D118	137118-1	DIODE, 30V 200mA DUAL SCHOTTKY	H 6
D119	137118-1	DIODE, 30V 200mA DUAL SCHOTTKY	I 4
D120	137118-1	DIODE, 30V 200mA DUAL SCHOTTKY	H 5
D121	C 9283-0	DIODE, MMBD4148/914 SOT-23 SMT	H 6
D122	C 9283-0	DIODE, MMBD4148/914 SOT-23 SMT	M 5
D123	C 9283-0	DIODE, MMBD4148/914 SOT-23 SMT	N 5
D124	137118-1	DIODE, 30V 200mA DUAL SCHOTTKY	M 5
D125	137118-1	DIODE, 30V 200mA DUAL SCHOTTKY	M 4
D126	137118-1	DIODE, 30V 200mA DUAL SCHOTTKY	L 4
D127	137118-1	DIODE, 30V 200mA DUAL SCHOTTKY	L 4
D1300	C 9283-0	DIODE, MMBD4148/914 SOT-23 SMT	P 5
D1300X	C 9283-0	DIODE, MMBD4148/914 SOT-23 SMT	P 10
D1301	125255-1	DIODE, ULTRAFAST 200V 1A SMA	P 5
D1301X	125255-1	DIODE, ULTRAFAST 200V 1A SMA	P 10
D1302	C10144-1	DIODE, ZENER 15V SOT-23	O 4
D1302X	C10144-1	DIODE, ZENER 15V SOT-23	O 9
D1303	136010-1	DIODE, ZENER 500MW 12V SOD 123	P 4
D1303X	136010-1	DIODE, ZENER 500MW 12V SOD 123	P 9
D1304	C10370-2	DIODE, ZENER 10V MMBZ5240BL	P 4
D1304X	C10370-2	DIODE, ZENER 10V MMBZ5240BL	P 10
D1305	C 9283-0	DIODE, MMBD4148/914 SOT-23 SMT	P 5
D1305X	C 9283-0	DIODE, MMBD4148/914 SOT-23 SMT	P 10
D1306	C 9283-0	DIODE, MMBD4148/914 SOT-23 SMT	P 2
D1306X	C 9283-0	DIODE, MMBD4148/914 SOT-23 SMT	P 8
D1307	125255-1	DIODE, ULTRAFAST 200V 1A SMA	P 2
D1307X	125255-1	DIODE, ULTRAFAST 200V 1A SMA	P 8
D1308	C10144-1	DIODE, ZENER 15V SOT-23	O 2
D1308X	C10144-1	DIODE, ZENER 15V SOT-23	O 8
D1309	136010-1	DIODE, ZENER 500MW 12V SOD 123	P 1
D1309X	136010-1	DIODE, ZENER 500MW 12V SOD 123	P 7
D1310	C10370-2	DIODE, ZENER 10V MMBZ5240BL	P 1
D1310X	C10370-2	DIODE, ZENER 10V MMBZ5240BL	P 7
D1311	C 9283-0	DIODE, MMBD4148/914 SOT-23 SMT	P 2
D1311X	C 9283-0	DIODE, MMBD4148/914 SOT-23 SMT	P 8
D1312		OPEN	O 3
D1312X		OPEN	O 9
D1313	C 9283-0	DIODE, MMBD4148/914 SOT-23 SMT	O 3
D1313X	C 9283-0	DIODE, MMBD4148/914 SOT-23 SMT	O 8
D1314	C 9283-0	DIODE, MMBD4148/914 SOT-23 SMT	O 3
D1314X	C 9283-0	DIODE, MMBD4148/914 SOT-23 SMT	O 9

D1315		OPEN	O 3
D1315X		OPEN	O 9
E1	136343-1	LED, GREEN 1206 INNER LENS	F 6
F1	A10285-46	FUSE, .5A 250V TIME DELAY	F 4
F1X	134380-1	FUSE CLIP, PC MNT 5MM T/A	E 4
F1XX	134380-1	FUSE CLIP, PC MNT 5MM T/A	F 4
HS21	136497-2	HEATSINK, NMS SMPS RECTIFIER	I 8
HS22	136497-2	HEATSINK, NMS SMPS RECTIFIER	G 8
HS23	137468-1	HEATSINK, NEMESIS IGBT	B 10
HS24	137468-1	HEATSINK, NEMESIS IGBT	D 10
HS25	137468-1	HEATSINK, NEMESIS IGBT	B 8
HS26	137468-1	HEATSINK, NEMESIS IGBT	D 8
HW1	101016-1	LBL, BARCODE	I 7
HW2	101016-1	LBL, BARCODE	B 6
HW3	101016-1	LBL, BARCODE	J 4*
HW4	101016-1	LBL, BARCODE	O 4
HW5	101016-1	LBL, BARCODE	O 9
HW20	A10019-16	6 X 32 PCB CAPTIVE NUT	B 11
HW21	A10019-16	6 X 32 PCB CAPTIVE NUT	E 11
J1A	101031-1	.250 FASTON, AUTO INSERTABLE	H 3
J1B	101031-1	.250 FASTON, AUTO INSERTABLE	H 3
J2A	101031-1	.250 FASTON, AUTO INSERTABLE	H 2
J2B	101031-1	.250 FASTON, AUTO INSERTABLE	H 2
J3	136720-1	HDR, LATCH/EJECT 10 PIN .1X.1	F 5
J21	136937-1	RBN, 10PIN PCB VNT HDR 4.0" L	G 11
J22	132551-1	RECEPT, 8PIN VERT .1 CTRS SMD	D 8
J23	132551-1	RECEPT, 8PIN VERT .1 CTRS SMD	B 8
J24	132551-1	RECEPT, 8PIN VERT .1 CTRS SMD	E 8
J25	132551-1	RECEPT, 8PIN VERT .1 CTRS SMD	C 10
J26	132551-1	RECEPT, 8PIN VERT .1 CTRS SMD	B 10
J27	132551-1	RECEPT, 8PIN VERT .1 CTRS SMD	E 10
J28	131314-1	RECEPT, 30P VERT 2ROW .1 CTR	D 11
J100	133931-1	HDR, 30 PIN DUAL ROW R/A	J 5
L1	138048-1	INDUCTOR, CM 1.5MH HORIZONTAL	B 2
L2	138048-1	INDUCTOR, CM 1.5MH HORIZONTAL	E 2
L4	138048-1	INDUCTOR, CM 1.5MH HORIZONTAL	G 2
L21	137189-1	INDCT, PS I-TECH 4000/6000	M 10
L22	137119-1	INDUCTOR, 22UH 2520 SMT T/R	I 11
L23	137119-1	INDUCTOR, 22UH 2520 SMT T/R	I 11
L101	137119-1	INDUCTOR, 22UH 2520 SMT T/R	I 4
L102	137119-1	INDUCTOR, 22UH 2520 SMT T/R	I 4
P21	132041-2	CBL, 26P PCB MNT HDR - IDC SKT	F 11
P22	131315-2	HDR, 6PIN MATE N LOK IN LINE	H 11
P1300	132533-1	HDR, 8PIN .1 CTR R/A SMD	O 4
P1300X	132533-1	HDR, 8PIN .1 CTR R/A SMD	O 10
P1301	132533-1	HDR, 8PIN .1 CTR R/A SMD	O 2
P1301X	132533-1	HDR, 8PIN .1 CTR R/A SMD	O 7
P1302	132533-1	HDR, 8PIN .1 CTR R/A SMD	O 3
P1302X	132533-1	HDR, 8PIN .1 CTR R/A SMD	O 9
PWB1	136542-10	PWB, I-TECH PANEL 3	A 1
Q21		OPEN	A 8
Q21X		OPEN	A 8
Q22	138497-1	PRP, 136291-1 (G30N60HS) .250	B 8
Q22X	136330-1	CLIP, TO-220	B 8
Q23	138497-1	PRP, 136291-1 (G30N60HS) .250	B 8
Q23X	136330-1	CLIP, TO-220	B 8
Q24	138497-1	PRP, 136291-1 (G30N60HS) .250	C 8
Q24X	136330-1	CLIP, TO-220	C 8
Q25	138497-1	PRP, 136291-1 (G30N60HS) .250	C 8

Q25X	136330-1	CLIP, TO-220	C 8
Q26		OPEN	C 8
Q26X		OPEN	C 8
Q27		OPEN	D 8
Q27X		OPEN	D 8
Q28	138497-1	PRP, 136291-1 (G30N60HS) .250	D 8
Q28X	136330-1	CLIP, TO-220	D 8
Q29	138497-1	PRP, 136291-1 (G30N60HS) .250	E 8
Q29X	136330-1	CLIP, TO-220	E 8
Q30	138497-1	PRP, 136291-1 (G30N60HS) .250	E 8
Q30X	136330-1	CLIP, TO-220	E 8
Q31	138497-1	PRP, 136291-1 (G30N60HS) .250	F 8
Q31X	136330-1	CLIP, TO-220	F 8
Q32		OPEN	F 8
Q32X		OPEN	F 8
Q33		OPEN	A 10
Q33X		OPEN	A 10
Q34	138497-1	PRP, 136291-1 (G30N60HS) .250	B 10
Q34X	136330-1	CLIP, TO-220	B 10
Q35	138497-1	PRP, 136291-1 (G30N60HS) .250	B 10
Q35X	136330-1	CLIP, TO-220	B 10
Q36	138497-1	PRP, 136291-1 (G30N60HS) .250	C 10
Q36X	136330-1	CLIP, TO-220	C 10
Q37	138497-1	PRP, 136291-1 (G30N60HS) .250	C 10
Q37X	136330-1	CLIP, TO-220	C 10
Q38		OPEN	C 10
Q38X		OPEN	C 10
Q39		OPEN	D 10
Q39X		OPEN	D 10
Q40	138497-1	PRP, 136291-1 (G30N60HS) .250	D 10
Q40X	136330-1	CLIP, TO-220	D 10
Q41	138497-1	PRP, 136291-1 (G30N60HS) .250	E 10
Q41X	136330-1	CLIP, TO-220	E 10
Q42	138497-1	PRP, 136291-1 (G30N60HS) .250	E 10
Q42X	136330-1	CLIP, TO-220	E 10
Q43	138497-1	PRP, 136291-1 (G30N60HS) .250	F 10
Q43X	136330-1	CLIP, TO-220	F 10
Q44		OPEN	F 10
Q44X		OPEN	F 10
Q45	C 3810-6	MPSA42 300V NPN T/R	B 11
Q46	137218-1	SCR, 12A MCR12DSN DPAK 369A	A 11
Q101	C10421-3	FET, 60V N-CH 2N7002LT1 SOT-23	J 6
Q103	C 7448-1	MMBT3904 CHIP NPN	M 4
Q105	C 7448-1	MMBT3904 CHIP NPN	M 5
Q106	C 7448-1	MMBT3904 CHIP NPN	M 5
Q107	C 7448-1	MMBT3904 CHIP NPN	M 5
Q108	C10421-3	FET, 60V N-CH 2N7002LT1 SOT-23	J 6
Q109	C 7448-1	MMBT3904 CHIP NPN	M 5
Q110	C10421-3	FET, 60V N-CH 2N7002LT1 SOT-23	H 5
Q111	C10421-3	FET, 60V N-CH 2N7002LT1 SOT-23	H 5
Q112	C10421-3	FET, 60V N-CH 2N7002LT1 SOT-23	H 5
Q113	C10421-3	FET, 60V N-CH 2N7002LT1 SOT-23	I 6
Q114	C 7448-1	MMBT3904 CHIP NPN	K 6
Q115	125798-1	XSTR,MMBT3906 LT3 10K REEL	K 6
Q116	C 7448-1	MMBT3904 CHIP NPN	I 5
Q117	125798-1	XSTR,MMBT3906 LT3 10K REEL	L 5
Q1300	125798-1	XSTR,MMBT3906 LT3 10K REEL	P 4
Q1300X	125798-1	XSTR,MMBT3906 LT3 10K REEL	P 9
Q1301	C 7448-1	MMBT3904 CHIP NPN	P 4

Q1301X	C 7448-1	MMBT3904 CHIP NPN	P 10
Q1302	125798-1	XSTR,MMBT3906 LT3 10K REEL	P 1
Q1302X	125798-1	XSTR,MMBT3906 LT3 10K REEL	P 7
Q1303	C 7448-1	MMBT3904 CHIP NPN	P 2
Q1303X	C 7448-1	MMBT3904 CHIP NPN	P 7
Q1304	136730-1	MOSFET, 60V 0.5A	O 3
Q1304X	136730-1	MOSFET, 60V 0.5A	O 8
Q1305	136730-1	MOSFET, 60V 0.5A	O 3
Q1305X	136730-1	MOSFET, 60V 0.5A	O 9
R1	A11368-10043	1.MOHM .25W 1% CHIP 1210	H 4
R2	A11368-10043	1.MOHM .25W 1% CHIP 1210	H 4
R5	A11368-15021	15.0K, 0.10W 1% MF 0805	C 5
R6	A11368-20011	2.0K, 0.10W 1% MF 0805	D 5
R7	133910-1	RES, 27KOHM 5% 2W RAD T/R	D 5
R8	A11368-10R01	10 OHM .1W 1% 0805 T/R	D 5
R10		OPEN	F 5
R11	A11368-10021	10K 1/10W 1% SMD 0805 T/R	F 5
R12	138505-1	PRP, C9930-6 11.8OHM 3W 5% RAD	E 4
R13	A11368-68111	6.81K 0.10W 1% CHIP 0805	F 6
R21		OPEN	A 8
R22	A11371-5R11	5.1 OHM 0.1W 5% 0805 SMT	B 8
R23	A11371-5R11	5.1 OHM 0.1W 5% 0805 SMT	B 8
R24	A11371-5R11	5.1 OHM 0.1W 5% 0805 SMT	B 8
R25	A11371-5R11	5.1 OHM 0.1W 5% 0805 SMT	C 8
R26		OPEN	C 8
R27		OPEN	D 8
R28	A11371-5R11	5.1 OHM 0.1W 5% 0805 SMT	D 8
R29	A11371-5R11	5.1 OHM 0.1W 5% 0805 SMT	E 8
R30	A11371-5R11	5.1 OHM 0.1W 5% 0805 SMT	E 8
R31	A11371-5R11	5.1 OHM 0.1W 5% 0805 SMT	F 8
R32		OPEN	F 8
R33		OPEN	A 10
R34	A11371-5R11	5.1 OHM 0.1W 5% 0805 SMT	B 10
R35	A11371-5R11	5.1 OHM 0.1W 5% 0805 SMT	B 10
R36	A11371-5R11	5.1 OHM 0.1W 5% 0805 SMT	C 10
R37	A11371-5R11	5.1 OHM 0.1W 5% 0805 SMT	C 10
R38		OPEN	C 10
R39		OPEN	D 10
R40	A11371-5R11	5.1 OHM 0.1W 5% 0805 SMT	E 10
R41	A11371-5R11	5.1 OHM 0.1W 5% 0805 SMT	E 10
R42	A11371-5R11	5.1 OHM 0.1W 5% 0805 SMT	E 10
R43	A11371-5R11	5.1 OHM 0.1W 5% 0805 SMT	F 10
R44		OPEN	F 10
R45		OPEN	A 8
R46	A11368-1R001	1 OHM .1W 1% 0805 T/R	B 8
R47	A11368-1R001	1 OHM .1W 1% 0805 T/R	B 8
R48	A11368-1R001	1 OHM .1W 1% 0805 T/R	C 8
R49	A11368-1R001	1 OHM .1W 1% 0805 T/R	C 8
R50		OPEN	C 8
R51		OPEN	D 8
R52	A11368-1R001	1 OHM .1W 1% 0805 T/R	E 8
R53	A11368-1R001	1 OHM .1W 1% 0805 T/R	E 8
R54	A11368-1R001	1 OHM .1W 1% 0805 T/R	E 8
R55	A11368-1R001	1 OHM .1W 1% 0805 T/R	E 8
R56		OPEN	F 8
R57		OPEN	A 10
R58	A11368-1R001	1 OHM .1W 1% 0805 T/R	B 10
R59	A11368-1R001	1 OHM .1W 1% 0805 T/R	B 10
R60	A11368-1R001	1 OHM .1W 1% 0805 T/R	B 10

R61	A11368-1R001	1 OHM .1W 1% 0805 T/R	C 10
R62		OPEN	C 10
R63		OPEN	D 10
R64	A11368-1R001	1 OHM .1W 1% 0805 T/R	D 10
R65	A11368-1R001	1 OHM .1W 1% 0805 T/R	E 10
R66	A11368-1R001	1 OHM .1W 1% 0805 T/R	E 10
R67	A11368-1R001	1 OHM .1W 1% 0805 T/R	E 10
R68		OPEN	F 10
R69	A11368-10043	1.MOHM .25W 1% CHIP 1210	C 11
R70	A11368-10043	1.MOHM .25W 1% CHIP 1210	C 11
R72	A11371-8235	82K OHM 5% 1W 2512 T/R	I 9
R73	A11371-8235	82K OHM 5% 1W 2512 T/R	G 10
R74	A11371-8235	82K OHM 5% 1W 2512 T/R	I 9
R75	A11371-8235	82K OHM 5% 1W 2512 T/R	G 10
R76	A11368-10011	1.KOHM .1W 1% CHIP 0805	C 11
R77	A11368-10011	1.KOHM .1W 1% CHIP 0805	A 11
R78	A11368-10R01	10 OHM .1W 1% 0805 T/R	B 11
R79	A11368-40211	4.02K 1/10W 1% SMD 0805 T/R	C 11
R80	A11368-40211	4.02K 1/10W 1% SMD 0805 T/R	C 11
R81	A11368-40211	4.02K 1/10W 1% SMD 0805 T/R	C 11
R82	A11368-40211	4.02K 1/10W 1% SMD 0805 T/R	C 11
R83	A11368-40211	4.02K 1/10W 1% SMD 0805 T/R	C 11
R84	A11368-40211	4.02K 1/10W 1% SMD 0805 T/R	C 11
R94	A11368-10043	1.MOHM .25W 1% CHIP 1210	E 7
R95	A11368-10043	1.MOHM .25W 1% CHIP 1210	E 7
R99	138509-1	PRP, 134117-2 MOV 300V .125	G 7
R101	A11368-21521	21.5 KOHM .1W 1% 0805 T/R	J 5
R102	A11368-21521	21.5 KOHM .1W 1% 0805 T/R	J 5
R103	A11368-10020	RES, 10.0 KOHM 1/16W 1% 0603	J 5
R104	A11368-10020	RES, 10.0 KOHM 1/16W 1% 0603	J 5
R105	A11368-10020	RES, 10.0 KOHM 1/16W 1% 0603	J 5
R106	A11368-10020	RES, 10.0 KOHM 1/16W 1% 0603	J 5
R107	A11368-49910	RES, 4.99 KOHM 1/16W 1% 0603	J 5
R108	A11368-10020	RES, 10.0 KOHM 1/16W 1% 0603	J 5
R109	A11368-49910	RES, 4.99 KOHM 1/16W 1% 0603	J 6
R110	A11368-10020	RES, 10.0 KOHM 1/16W 1% 0603	J 5
R111	A11368-10020	RES, 10.0 KOHM 1/16W 1% 0603	J 6
R112	A11368-16910	RES, 1.69 KOHM 1/16W 1% 0603	J 6
R113	A11368-10020	RES, 10.0 KOHM 1/16W 1% 0603	K 5
R114	A11368-28031	RES, 280K .1W 0805 SMT T/R	K 5
R115	A11368-49910	RES, 4.99 KOHM 1/16W 1% 0603	H 5
R116	A11368-10010	RES, 1.0 KOHM 1/16W 1% 0603	H 5
R117	A11368-49910	RES, 4.99 KOHM 1/16W 1% 0603	J 5
R118	A11368-10010	RES, 1.0 KOHM 1/16W 1% 0603	H 5
R119	A11368-10020	RES, 10.0 KOHM 1/16W 1% 0603	H 5
R120	A11368-18221	18.2KOHM 0.1W 1% CHIP 0805	H 5
R121	A11368-10031	100.KOHM .1W 1% CHIP 0805	K 5
R122	A11368-17421	17.4KOHM .1W 1% 0805 T/R	K 5
R123	A11368-10031	100.KOHM .1W 1% CHIP 0805	K 5
R124	A11368-17421	17.4KOHM .1W 1% 0805 T/R	L 5
R125	A11368-10020	RES, 10.0 KOHM 1/16W 1% 0603	L 5
R126	A11368-23231	232KOHM 1% 0.1W 0805	L 5
R127	A11368-10020	RES, 10.0 KOHM 1/16W 1% 0603	L 5
R128	A11368-23231	232KOHM 1% 0.1W 0805	L 5
R129	A11368-20020	RES, 20.0 KOHM 1/16W 1% 0603	L 5
R130	A11368-20020	RES, 20.0 KOHM 1/16W 1% 0603	L 5
R131	A11368-10020	RES, 10.0 KOHM 1/16W 1% 0603	L 6
R132	A11368-20020	RES, 20.0 KOHM 1/16W 1% 0603	L 5
R133	A11368-20020	RES, 20.0 KOHM 1/16W 1% 0603	L 6

R134	A11368-10010	RES, 1.0 KOHM 1/16W 1% 0603	L 6
R135	A11368-10020	RES, 10.0 KOHM 1/16W 1% 0603	L 5
R136	A11368-28021	RES, 28K 1% .1W SMT 0805	L 5
R137	A11368-71520	RES, 71.5 KOHM 1/16W 1% 0603	L 5
R138	A11368-10020	RES, 10.0 KOHM 1/16W 1% 0603	L 5
R139	A11368-30131	301K 1/10W 1% SMD 0805 T/R	L 5
R140	A11368-10020	RES, 10.0 KOHM 1/16W 1% 0603	L 5
R141	A11368-20020	RES, 20.0 KOHM 1/16W 1% 0603	L 5
R142	A11368-10020	RES, 10.0 KOHM 1/16W 1% 0603	I 5
R143	A11368-10030	RES, 100.0 KOHM 1/16W 1% 0603	I 5
R144	A11368-10040	RES, 1.00 MOHM 1/16W 1% 0603	I 5
R145	A11368-10040	RES, 1.00 MOHM 1/16W 1% 0603	H 5
R146	A11368-10020	RES, 10.0 KOHM 1/16W 1% 0603	H 5
R147	A11368-10030	RES, 100.0 KOHM 1/16W 1% 0603	H 5
R148	A11368-33221	33.2KOHM .1W 1% 0805 T/R	I 5
R150	A11368-10020	RES, 10.0 KOHM 1/16W 1% 0603	J 5
R151	A11368-10010	RES, 1.0 KOHM 1/16W 1% 0603	J 5
R152	A11368-10030	RES, 100.0 KOHM 1/16W 1% 0603	I 5
R153	A11368-24920	RES, 24.9 KOHM 1/16W 1% 0603	I 5
R154	A11368-78721	78.7KOHM 0.1W 1% 0805 T/R	I 5
R155	A11368-10031	100.KOHM .1W 1% CHIP 0805	L 5
R156	A11368-23721	23.7K .10W 1% CHIP 0805	K 4
R157	A11368-75021	75K 1/10W 1% SMD 0805 T/R	L 4
R158	A11368-10040	RES, 1.00 MOHM 1/16W 1% 0603	L 4
R159	A11368-10031	100.KOHM .1W 1% CHIP 0805	L 5
R160	A11368-13011	1.3KOHM .1W 1% 0805 T/R	L 4
R161	A11368-86611	RES, 8.66 KOHM 1/10W 1% 0805	L 4
R162	A11368-86611	RES, 8.66 KOHM 1/10W 1% 0805	L 4
R163	A11368-68120	RES, 68.1 KOHM 1/16W 1% 0603	M 6
R164	A11371-1824	1.8K .5W 5% SMD CHIP 2010	L 5
R165	A11368-10020	RES, 10.0 KOHM 1/16W 1% 0603	K 5
R166	A11368-10030	RES, 100.0 KOHM 1/16W 1% 0603	L 5
R167	A11368-10030	RES, 100.0 KOHM 1/16W 1% 0603	M 5
R168	A11368-10520	RES, 10.5 KOHM 1/16W 1% 0603	M 6
R169	A11371-1824	1.8K .5W 5% SMD CHIP 2010	M 4
R170	A11368-68120	RES, 68.1 KOHM 1/16W 1% 0603	M 6
R171	A11368-10030	RES, 100.0 KOHM 1/16W 1% 0603	M 5
R172	A11368-20020	RES, 20.0 KOHM 1/16W 1% 0603	M 5
R173	A11368-20020	RES, 20.0 KOHM 1/16W 1% 0603	M 5
R174	A11368-20020	RES, 20.0 KOHM 1/16W 1% 0603	M 5
R175	A11368-31611	3.16K 0.1W 1% 0805 T/R	M 5
R176	A11368-20020	RES, 20.0 KOHM 1/16W 1% 0603	M 5
R177	A11368-53621	RES, 53.6K 1% 1W SMT 0805	M 5
R178	A11368-10520	RES, 10.5 KOHM 1/16W 1% 0603	M 6
R179	A11371-1824	1.8K .5W 5% SMD CHIP 2010	M 5
R180	A11368-10020	RES, 10.0 KOHM 1/16W 1% 0603	J 5
R181	A11368-20020	RES, 20.0 KOHM 1/16W 1% 0603	I 5
R182	A11368-60421	60.4K 1/10W 1% SMD 0805 T/R	I 5
R183	A11368-49910	RES, 4.99 KOHM 1/16W 1% 0603	K 5
R184	A11368-10010	RES, 1.0 KOHM 1/16W 1% 0603	J 5
R185	A11368-20020	RES, 20.0 KOHM 1/16W 1% 0603	L 5
R186	A11368-35711	RES, 3.57K 1% 0.10W 0805	J 5
R187	A11368-10030	RES, 100.0 KOHM 1/16W 1% 0603	J 5
R188	A11368-10R01	10 OHM .1W 1% 0805 T/R	K 6
R189	A11368-10020	RES, 10.0 KOHM 1/16W 1% 0603	K 5
R190	A11368-10040	RES, 1.00 MOHM 1/16W 1% 0603	K 5
R191	A11368-24901	249 OHM 0.1W 1% 0805 T/R	G 4
R192	A11368-10040	RES, 1.00 MOHM 1/16W 1% 0603	I 5
R193	A11368-49931	499KOHM .1W 1% 0805 T/R	J 6

R194	A11368-10020	RES, 10.0 KOHM 1/16W 1% 0603	J 6
R195	A11368-40211	4.02K 1/10W 1% SMD 0805 T/R	I 5
R196	A11368-40211	4.02K 1/10W 1% SMD 0805 T/R	I 5
R197	A11368-33221	33.2KOHM .1W 1% 0805 T/R	H 5
R198	A11368-20011	2.0K, 0.10W 1% MF 0805	I 5
R199	A11368-20011	2.0K, 0.10W 1% MF 0805	I 5
R200	A11368-10000	RES, 100 OHM 1/16W 1% 0603	H 5
R201	A11371-0R01	RES, 0 OHM 0805 50 MILOHM MAX	G 5
R202		OPEN	G 5
R203	A11368-10R01	10 OHM .1W 1% 0805 T/R	M 5
R204	A11368-16230	RES, 162K OHM 1% 1/16W 0603	L 5
R205	A11368-13030	RES, 130 KOHM 1/16W 1% 0603	M 5
R207	A11368-20011	2.0K, 0.10W 1% MF 0805	L 5
R208	A11368-10R01	10 OHM .1W 1% 0805 T/R	K 4
R209	A11368-30121	30.1K, 0.10W 1% MF 0805	H 5
R210	A11368-10020	RES, 10.0 KOHM 1/16W 1% 0603	H 5
R211	A11368-10020	RES, 10.0 KOHM 1/16W 1% 0603	H 5
R212	A11368-10000	RES, 100 OHM 1/16W 1% 0603	K 5
R213	A11368-10010	RES, 1.0 KOHM 1/16W 1% 0603	K 5
R214	A11368-10010	RES, 1.0 KOHM 1/16W 1% 0603	K 6
R215	A11368-10000	RES, 100 OHM 1/16W 1% 0603	K 5
R216	A11368-10020	RES, 10.0 KOHM 1/16W 1% 0603	J 5
R217	A11368-22120	RES, 22.1 KOHM 1% 1/16W 0603	K 5
R218	A11368-30121	30.1K, 0.10W 1% MF 0805	J 5
R219	A11368-22R11	22.1 OHM 0.1W 1% 0805 T/R	I 6
R220	A11368-22R11	22.1 OHM 0.1W 1% 0805 T/R	I 6
R221	A11368-54911	5.49K 0.1W 1% 0805 T/R	J 5
R222	A11368-10031	100.KOHM .1W 1% CHIP 0805	I 5
R223	A11368-23711	RES, 2.37K 1% 0.1W SMT 0805	J 5
R224	A11368-14720	RES, 14.7 KOHM 1/16W 1% 0603	I 5
R999	A11368-10011	1.KOHM .1W 1% CHIP 0805	N 7
R1022	A11371-2715	270 OHM 1W 5% 2512 SMT T/R	J 8
R1023	A11371-2715	270 OHM 1W 5% 2512 SMT T/R	J 8
R1024	A11371-2715	270 OHM 1W 5% 2512 SMT T/R	J 8
R1025	A11371-2715	270 OHM 1W 5% 2512 SMT T/R	K 8
R1026	A11371-2715	270 OHM 1W 5% 2512 SMT T/R	J 8
R1027	A11371-2715	270 OHM 1W 5% 2512 SMT T/R	J 8
R1028	A11371-2715	270 OHM 1W 5% 2512 SMT T/R	K 8
R1029	A11371-2715	270 OHM 1W 5% 2512 SMT T/R	K 8
R1030	A11371-2715	270 OHM 1W 5% 2512 SMT T/R	J 8
R1031	A11371-2715	270 OHM 1W 5% 2512 SMT T/R	J 8
R1300	A11368-47511	4.75KOHM 0.10W 1% CHIP 0805	O 5
R1300X	A11368-47511	4.75KOHM 0.10W 1% CHIP 0805	O 10
R1301	A11368-10021	10K 1/10W 1% SMD 0805 T/R	O 4
R1301X	A11368-10021	10K 1/10W 1% SMD 0805 T/R	O 9
R1302	A11368-10011	1.KOHM .1W 1% CHIP 0805	P 4
R1302X	A11368-10011	1.KOHM .1W 1% CHIP 0805	P 9
R1303	A11368-10021	10K 1/10W 1% SMD 0805 T/R	P 4
R1303X	A11368-10021	10K 1/10W 1% SMD 0805 T/R	P 9
R1304	A11368-10011	1.KOHM .1W 1% CHIP 0805	O 4
R1304X	A11368-10011	1.KOHM .1W 1% CHIP 0805	O 10
R1305	A11368-10021	10K 1/10W 1% SMD 0805 T/R	P 4
R1305X	A11368-10021	10K 1/10W 1% SMD 0805 T/R	P 10
R1306	A11368-10021	10K 1/10W 1% SMD 0805 T/R	O 4
R1306X	A11368-10021	10K 1/10W 1% SMD 0805 T/R	O 10
R1307	A11368-80611	8.06K OHM 1% 0.1W 0805 T/R	P 5
R1307X	A11368-80611	8.06K OHM 1% 0.1W 0805 T/R	P 10
R1308	A11368-47511	4.75KOHM 0.10W 1% CHIP 0805	O 2
R1308X	A11368-47511	4.75KOHM 0.10W 1% CHIP 0805	O 8

R1309	A11368-10021	10K 1/10W 1% SMD 0805 T/R	O 1
R1309X	A11368-10021	10K 1/10W 1% SMD 0805 T/R	O 7
R1310	A11368-10011	1.KOHM .1W 1% CHIP 0805	P 1
R1310X	A11368-10011	1.KOHM .1W 1% CHIP 0805	P 7
R1311	A11368-10021	10K 1/10W 1% SMD 0805 T/R	P 1
R1311X	A11368-10021	10K 1/10W 1% SMD 0805 T/R	P 7
R1312	A11368-10011	1.KOHM .1W 1% CHIP 0805	O 1
R1312X	A11368-10011	1.KOHM .1W 1% CHIP 0805	O 7
R1313	A11368-10021	10K 1/10W 1% SMD 0805 T/R	P 1
R1313X	A11368-10021	10K 1/10W 1% SMD 0805 T/R	P 7
R1314	A11368-10021	10K 1/10W 1% SMD 0805 T/R	O 2
R1314X	A11368-10021	10K 1/10W 1% SMD 0805 T/R	O 7
R1315	A11368-80611	8.06K OHM 1% 0.1W 0805 T/R	P 2
R1315X	A11368-80611	8.06K OHM 1% 0.1W 0805 T/R	P 8
R1316	A11368-10011	1.KOHM .1W 1% CHIP 0805	O 3
R1316X	A11368-10011	1.KOHM .1W 1% CHIP 0805	O 8
R1317	A11368-10031	100.KOHM .1W 1% CHIP 0805	O 3
R1317X	A11368-10031	100.KOHM .1W 1% CHIP 0805	O 8
R1318	A11368-10001	100 OHM 1% 0805 RES T/R	O 3
R1318X	A11368-10001	100 OHM 1% 0805 RES T/R	O 8
R1319	A11371-3005	30 OHM 1W 5% 2512 T/R	P 3
R1319X	A11371-3005	30 OHM 1W 5% 2512 T/R	P 8
R1320	A11368-1R001	1 OHM .1W 1% 0805 T/R	P 3
R1320X	A11368-1R001	1 OHM .1W 1% 0805 T/R	P 8
R1321	A11371-3005	30 OHM 1W 5% 2512 T/R	P 3
R1321X	A11371-3005	30 OHM 1W 5% 2512 T/R	P 9
R1322	A11368-10001	100 OHM 1% 0805 RES T/R	O 3
R1322X	A11368-10001	100 OHM 1% 0805 RES T/R	O 9
R1323	A11368-10031	100.KOHM .1W 1% CHIP 0805	O 3
R1323X	A11368-10031	100.KOHM .1W 1% CHIP 0805	O 9
R1324	A11368-10011	1.KOHM .1W 1% CHIP 0805	O 3
R1324X	A11368-10011	1.KOHM .1W 1% CHIP 0805	O 9
RN1	131667-1	NETWORK, PREC HI VOLT DIVIDER	C 4
RT21	127518-3	NTC, 20K J 10% #8 RING	A 11
RT21X	103415-10605	SCR, #6-32X.312 SEMS TFS CONE	A 10
RT22	127518-3	NTC, 20K J 10% #8 RING	A 11
RT22X	103415-10605	SCR, #6-32X.312 SEMS TFS CONE	A 8
RT23	138357-1	PRP, 101103-1 PTC .155	B 11
RT23X	C 8982-8	TO-220 XSISTOR HOLDER, PLASTIC	B 11
RT24	138357-1	PRP, 101103-1 PTC .155	A 11
RT24X	C 8982-8	TO-220 XSISTOR HOLDER, PLASTIC	A 11
T1	136934-2	FLY BACK XFMR, EMI NEMESIS	E 5
T21	136938-1	XFMR, PS MAIN I-TECH 3000	J 10
T1300	138503-1	PRP, 136722-1 XFMR .090	O 5
T1300X	138503-1	PRP, 136722-1 XFMR .090	O 11
TP1	127064-1	TEST POINT, SMT 1206	F 5
TP3	127064-1	TEST POINT, SMT 1206	D 6
TP4	127064-1	TEST POINT, SMT 1206	E 5
TP22	127064-1	TEST POINT, SMT 1206	A 7
TP23	127064-1	TEST POINT, SMT 1206	I 7
TP101	127064-1	TEST POINT, SMT 1206	J 5
TP102	127064-1	TEST POINT, SMT 1206	J 5
TP103	127064-1	TEST POINT, SMT 1206	I 6
TP104	127064-1	TEST POINT, SMT 1206	H 6
TP105	127064-1	TEST POINT, SMT 1206	L 5
TP106	127064-1	TEST POINT, SMT 1206	L 6
TP109	127064-1	TEST POINT, SMT 1206	G 6
TP110	127064-1	TEST POINT, SMT 1206	H 5
TP111	127064-1	TEST POINT, SMT 1206	M 4

TP112	127064-1	TEST POINT, SMT 1206	M 5
TP113	127064-1	TEST POINT, SMT 1206	I 5
TP116	127064-1	TEST POINT, SMT 1206	M 6
TP117	127064-1	TEST POINT, SMT 1206	M 6
TP1300	127064-1	TEST POINT, SMT 1206	O 4
TP1300X	127064-1	TEST POINT, SMT 1206	O 9
TP1301	127064-1	TEST POINT, SMT 1206	P 4
TP1301X	127064-1	TEST POINT, SMT 1206	P 10
TP1302	127064-1	TEST POINT, SMT 1206	P 4
TP1302X	127064-1	TEST POINT, SMT 1206	P 9
TP1303	127064-1	TEST POINT, SMT 1206	O 4
TP1303X	127064-1	TEST POINT, SMT 1206	O 10
TP1304	127064-1	TEST POINT, SMT 1206	P 5
TP1304X	127064-1	TEST POINT, SMT 1206	P 10
TP1305	127064-1	TEST POINT, SMT 1206	P 4
TP1305X	127064-1	TEST POINT, SMT 1206	P 10
TP1306	127064-1	TEST POINT, SMT 1206	O 1
TP1306X	127064-1	TEST POINT, SMT 1206	O 7
TP1307	127064-1	TEST POINT, SMT 1206	P 2
TP1307X	127064-1	TEST POINT, SMT 1206	P 7
TP1308	127064-1	TEST POINT, SMT 1206	P 1
TP1308X	127064-1	TEST POINT, SMT 1206	P 7
TP1309	127064-1	TEST POINT, SMT 1206	O 2
TP1309X	127064-1	TEST POINT, SMT 1206	O 7
TP1310	127064-1	TEST POINT, SMT 1206	P 2
TP1310X	127064-1	TEST POINT, SMT 1206	P 8
TP1311	127064-1	TEST POINT, SMT 1206	P 2
TP1311X	127064-1	TEST POINT, SMT 1206	P 7
U1	136841-1	IC, SMPS CTRL VIPER100SP SMD	D 5
U101	C 9012-3	OP AMP, QUAD LO NOISE MC33079D	J 5
U102	C 9012-3	OP AMP, QUAD LO NOISE MC33079D	K 5
U103	C 9038-8	COMPARATOR, QUAD LM339D SO-14	K 5
U104	136721-1	IC,LM319M HISPD DUAL COMPARTOR	I 6
U105	136840-1	IC, CONTROLLER SG3525AP PWM	H 5
U106	C 9038-8	COMPARATOR, QUAD LM339D SO-14	L 5
U107	C 9012-3	OP AMP, QUAD LO NOISE MC33079D	L 5
U108	C 9012-3	OP AMP, QUAD LO NOISE MC33079D	I 5
U109	126540-1	IC,QUAD 2 INPUT NOR GATE SO-14	H 5
U110	136648-1	IC, CD74HC4059 DIV-BY-N COUNTR	H 5
U111	C10344-7	74HC74AD DUAL D FLIP FLOP SOIC	H 4
U112	C 9898-5	78L05ACM 5V 5%RES SO-8 SMT	H 6
U113	102484-1	REG +15V D2PAK 2.25W	N 5
U114	102485-1	REG -15V D2PAK 2.25W	N 6
U115	137565-1	IC, AD633 ANALOG MULTIPLIER	I 5
U116	C 8262-5	MC33078D LOW NOISE DUAL OP AMP	L 5
U1300	136729-1	IC, CMOS QUAD NOR GATE SOIC	P 4
U1300X	136729-1	IC, CMOS QUAD NOR GATE SOIC	P 10
U1301	136728-1	IC, DUAL 4A GATE DRIVER	O 5
U1301X	136728-1	IC, DUAL 4A GATE DRIVER	O 10
U1302	136728-1	IC, DUAL 4A GATE DRIVER	O 4
U1302X	136728-1	IC, DUAL 4A GATE DRIVER	O 10
U1303	136728-1	IC, DUAL 4A GATE DRIVER	O 4
U1303X	136728-1	IC, DUAL 4A GATE DRIVER	O 10
U1304	136729-1	IC, CMOS QUAD NOR GATE SOIC	P 2
U1304X	136729-1	IC, CMOS QUAD NOR GATE SOIC	P 8
U1305	136728-1	IC, DUAL 4A GATE DRIVER	O 2
U1305X	136728-1	IC, DUAL 4A GATE DRIVER	O 8
U1306	136728-1	IC, DUAL 4A GATE DRIVER	O 2
U1306X	136728-1	IC, DUAL 4A GATE DRIVER	O 7

U1307	136728-1	IC, DUAL 4A GATE DRIVER	O 1
U1307X	136728-1	IC, DUAL 4A GATE DRIVER	O 7
W21	137125-2	WIRE, 14GA BRN 5.75" LINE	G 7
W22	137125-2	WIRE, 14GA BRN 5.75" LINE	H 7
W23	137122-2	WIRE, 14GA BLU 4.25" NTRL	H 7
W24	137122-2	WIRE, 14GA BLU 4.25" NTRL	H 7
WP1	137127-1	WIRE, 12GA BRN 2.75" LINE	A 4
WP2	137127-1	WIRE, 12GA BRN 2.75" LINE	A 5
WP3	137129-2	WIRE, 12GA BRN LINE	A 4
WP4	137124-2	WIRE, 12GA BLU NTRL	A 1

REVISION HISTORY							
E. C. N.	ZONE	REV	DESCRIPTION	DATE	APPROVED DWN	CM	PE
		A	SEE 136871-6_A. XLS FOR DATA AND REVISION HISTORY	4-12-04	JFL	KZ	TDM
04N0235		B	SEE 136871-6_B. XLS FOR DATA AND REVISION HISTORY	4-22-04	JFL	KZ	TDM
04N0314		C	SEE 136871-6_C. XLS FOR DATA AND REVISION HISTORY	6-08-04	JFL	KZ	SC
05N0077		D	SEE 136871-6_D. XLS FOR DATA AND REVISION HISTORY	1-28-05	JFL	DSV	TJS

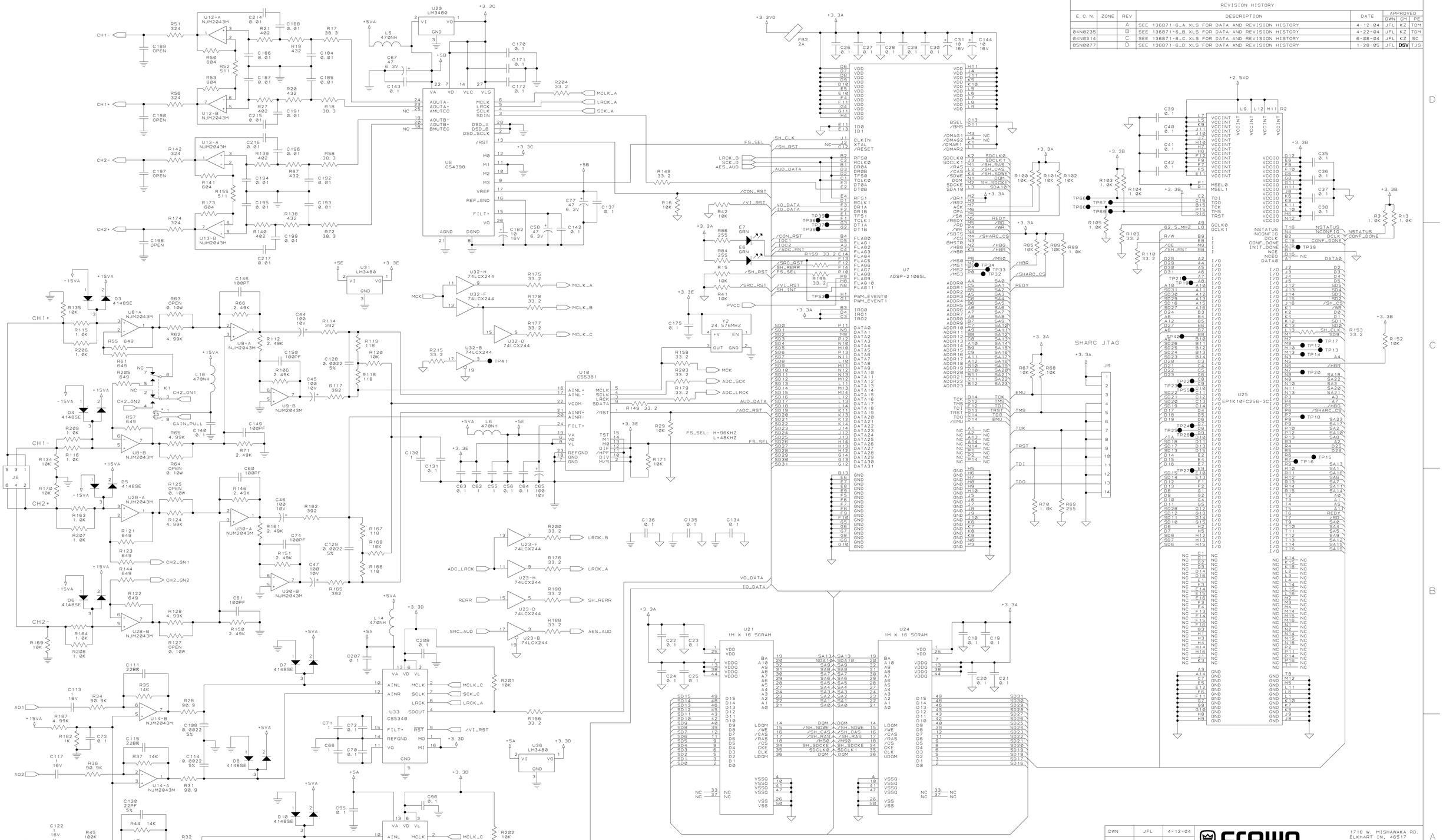

NOTES:

1. SEE 136871-6_D. XLS FOR PARTS LIST DATA
2. ALL RESISTORS ARE IN OHMS, 0.063W, 1% UNLESS OTHERWISE SPECIFIED.
3. ALL CAPACITORS ARE IN MICROFARADS UNLESS OTHERWISE SPECIFIED.
4. RELAY(S) SHOWN IN DE-ENERGIZED POSITION.

UNCONTROLLED
UNLESS OTHERWISE MARKED IN RED INK BY CM AS A CONTROLLED COPY, COPIES OF THESE DOCUMENTS INCLUDING ASSOCIATED ELECTRONIC REPRODUCTIONS ARE FOR REFERENCE ONLY.

THESE DRAWINGS AND SPECIFICATIONS ARE THE PROPERTY OF CROWN INTERNATIONAL, INC. AND SHALL NOT BE REPRODUCED, COPIED, OR USED AS THE BASIS FOR THE MANUFACTURE OR SALE OF APPARATUS OR DEVICES WITHOUT PERMISSION.

	DWN	JFL	4-12-04
	CM	KZ	4-16-04
DISTRIBUTION	PE	TDM	4-12-04
K			
FILENAME 136871-6_D. TIF			
TOLERANCE UNLESS OTHERWISE SPECIFIED .00 = ±.02" .000 = ±.010" DRILLS = ±.003"			
DO NOT SCALE DRAWING			

crown INTERNATIONAL, INC.
1718 W. MISHAWAKA RD.
ELKHART IN. 46517
PHONE 574-294-8000
WWW.CROWNAUDIO.COM

TITLE

PWA, USP3T MAIN

SIZE	DWG NO.	REV
D	136871-6	D

SCALE NONE | PROJ NO. MD5010 | SHEET 1 OF 4

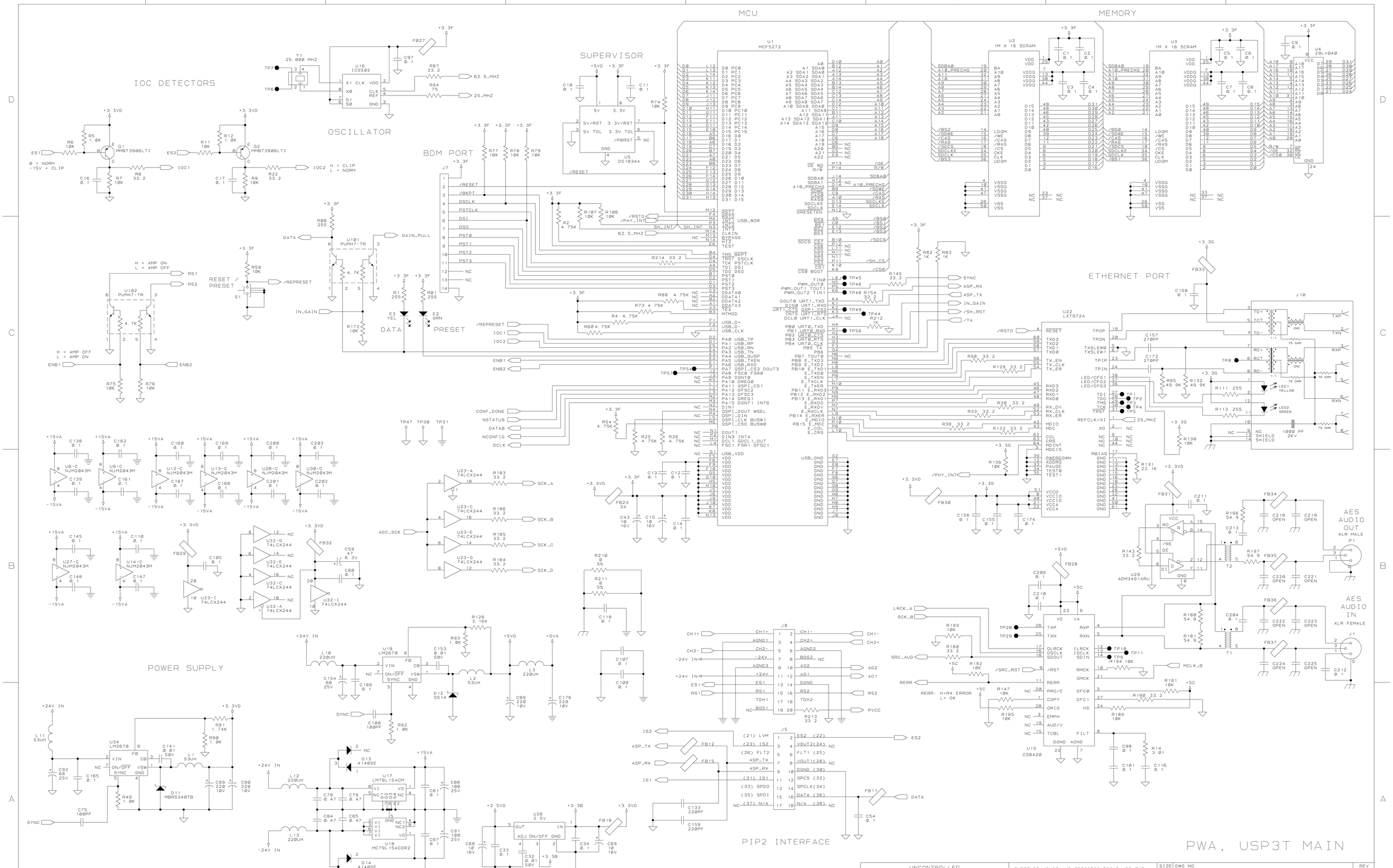

UNCONTROLLED
UNLESS OTHERWISE MARKED IN RED INK BY CM AS A CONTROLLED COPY, COPIES OF THESE DOCUMENTS INCLUDING ASSOCIATED ELECTRONIC REPRODUCTIONS ARE FOR REFERENCE ONLY.

THESE DRAWINGS AND SPECIFICATIONS ARE THE PROPERTY OF CROWN INTERNATIONAL, INC. AND SHALL NOT BE REPRODUCED, COPIED, OR USED AS THE BASIS FOR THE MANUFACTURE OR SALE OF APPARATUS OR DEVICES WITHOUT PERMISSION.

SIZE	DWG NO.	REV
D	136871-6	D
SCALE NONE	PROJ NO. MDS01D0	SHEET 2 OF 4

COMPONENT MAP

TOP SIDE

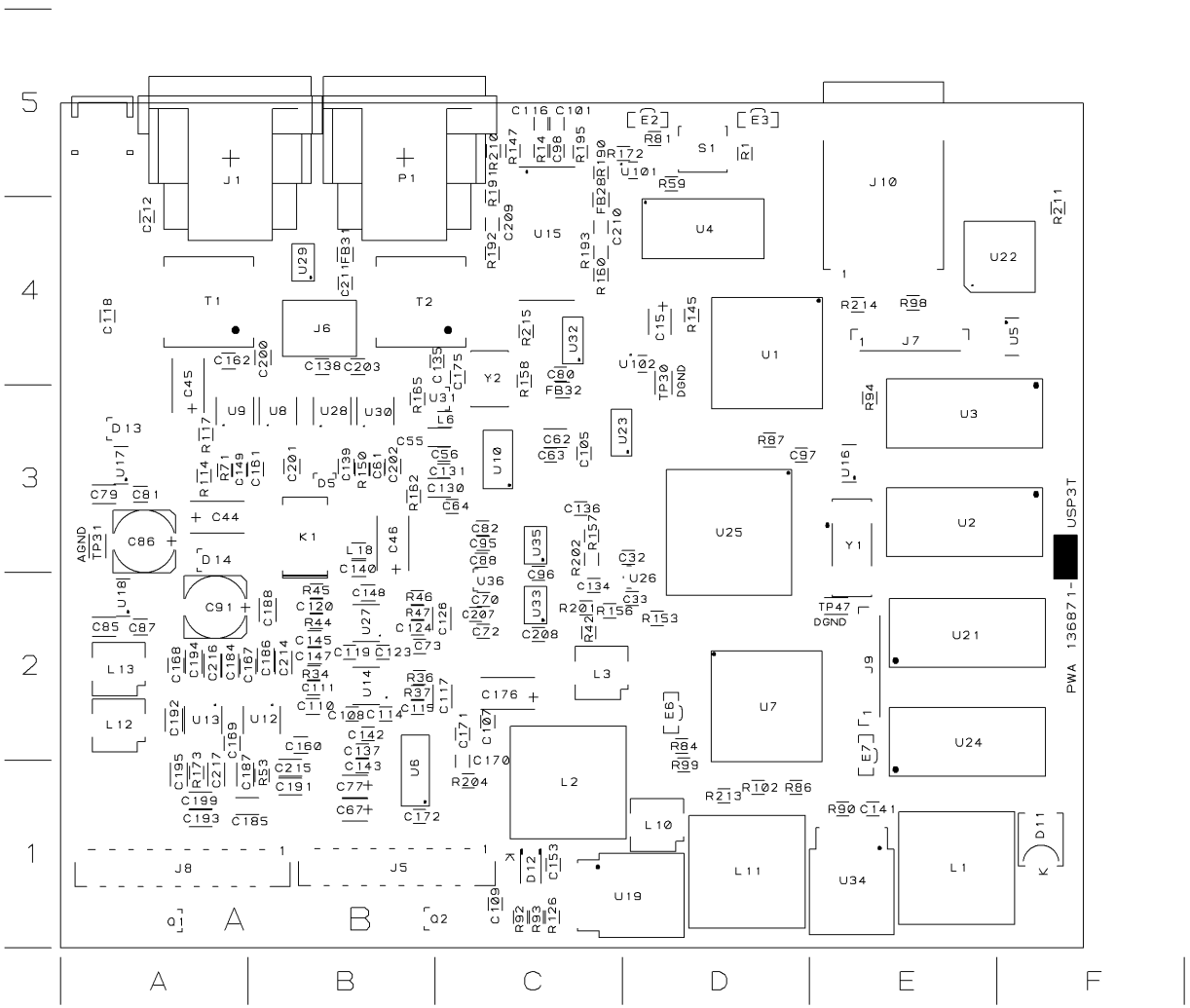

UNCONTROLLED	THESE DRAWINGS AND SPECIFICATIONS ARE THE PROPERTY OF CROWN INTERNATIONAL, INC. AND SHALL NOT BE REPRODUCED, COPIED, OR USED AS THE BASIS FOR THE MANUFACTURE OR SALE OF APPARATUS OR DEVICES WITHOUT PERMISSION.	SIZE A	DWG NO. 136871-6	REV D
UNLESS OTHERWISE MARKED IN RED INK BY CM AS A CONTROLLED COPY, COPIES OF THESE DOCUMENTS INCLUDING ASSOCIATED ELECTRONIC REPRODUCTIONS ARE FOR REFERENCE ONLY.		SCALE FULL	PROJ NO. MD501D0	SHEET 3 OF 4

COMPONENT MAP
BOTTOM SIDE

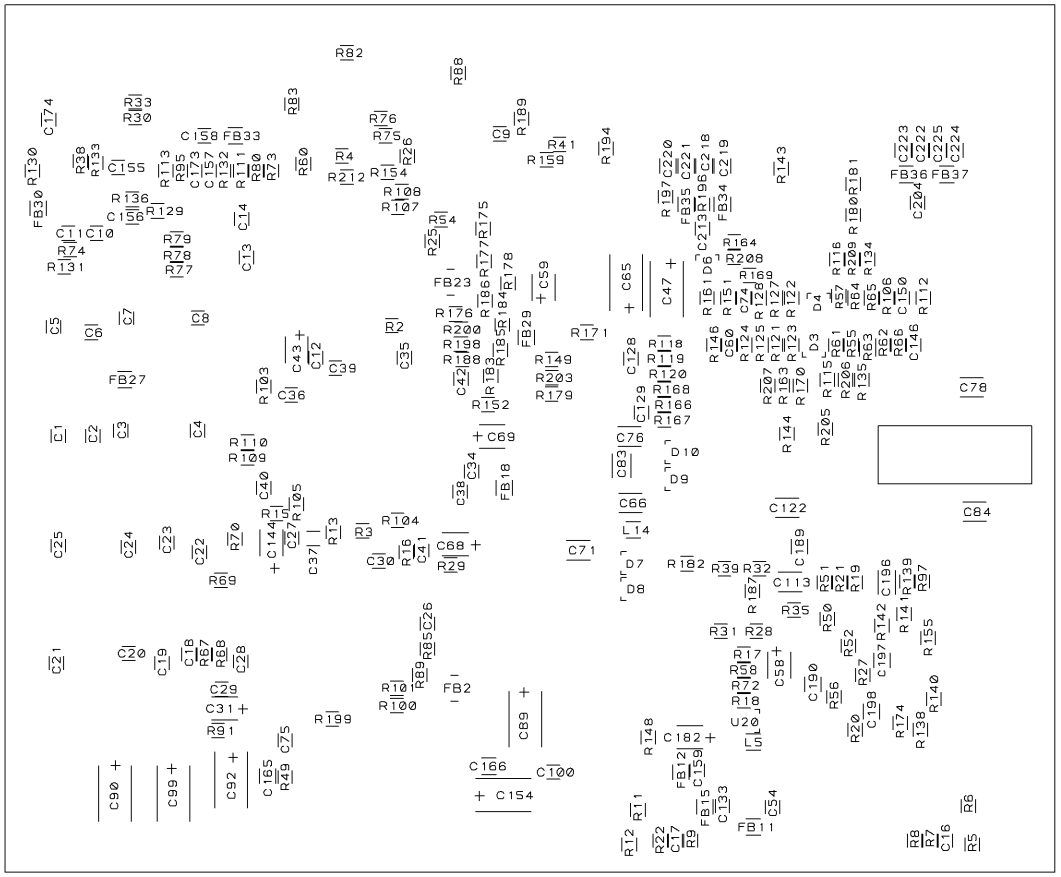

UNCONTROLLED	THESE DRAWINGS AND SPECIFICATIONS ARE THE PROPERTY OF CROWN INTERNATIONAL, INC. AND SHALL NOT BE REPRODUCED, COPIED, OR USED AS THE BASIS FOR THE MANUFACTURE OR SALE OF APPARATUS OR DEVICES WITHOUT PERMISSION.	SIZE A	DWG NO. 136871-6	REV D
UNLESS OTHERWISE MARKED IN RED INK BY CM AS A CONTROLLED COPY, COPIES OF THESE DOCUMENTS INCLUDING ASSOCIATED ELECTRONIC REPRODUCTIONS ARE FOR REFERENCE ONLY.		SCALE FULL	PROJ NO. MD501D0	SHEET 4 OF 4

DWG NO.	SH	REV
137682	1	1

REVISIONS					APPROVALS			
E.C.N.	ZONE	REV	DESCRIPTION	DATE	DWN	CHK	CM	PE
		1	INITIAL RELEASE FOR PROTOTYPE	9-28-04	RG	N/A		RG

RECOMMENDED ASSEMBLY TORQUES

ITEM NO.	C.P.N.	TORQUE SETTINGS
4	103415-70606	17-19 IN LBS
10	103436-10610	9-11 IN LBS

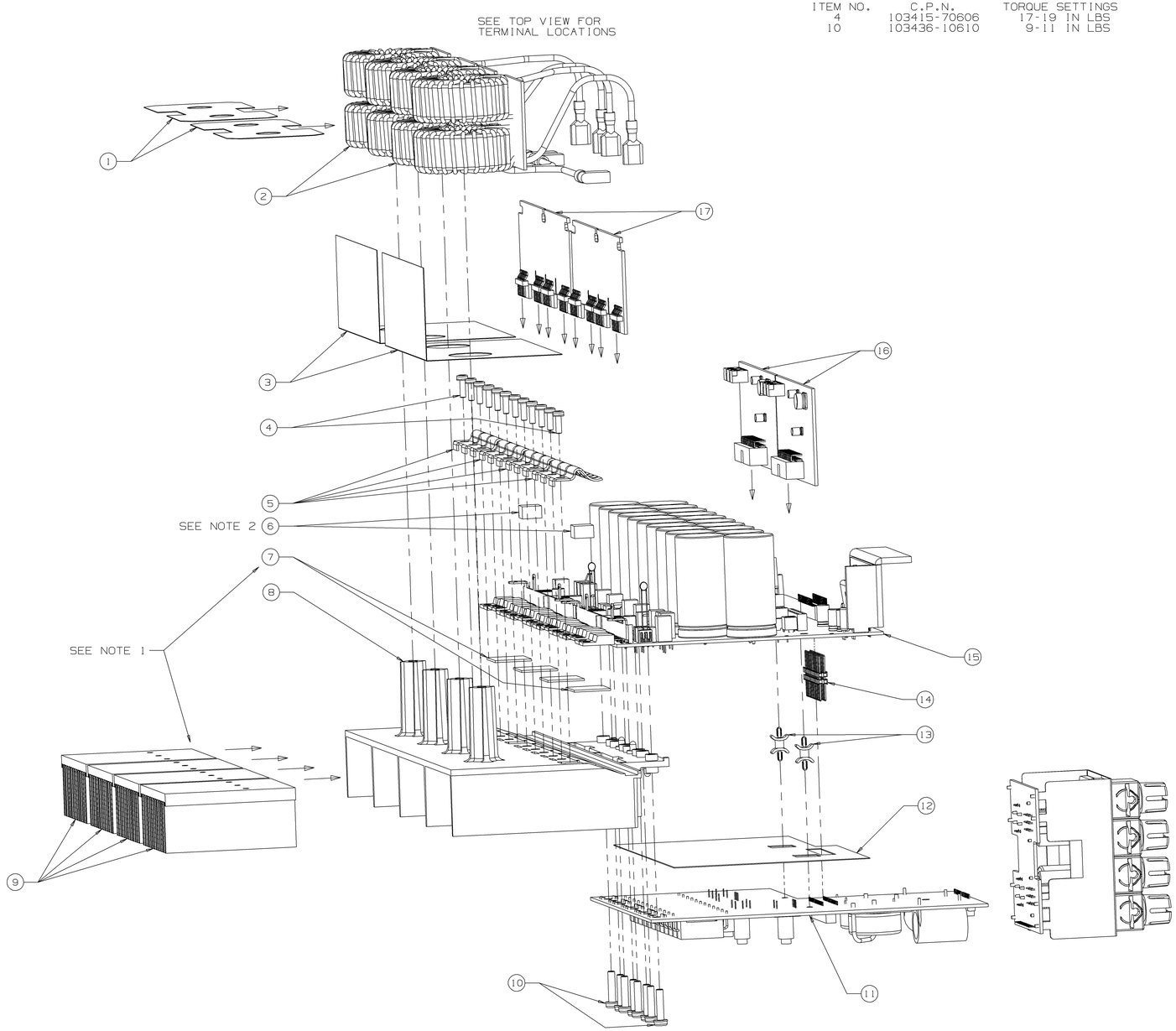

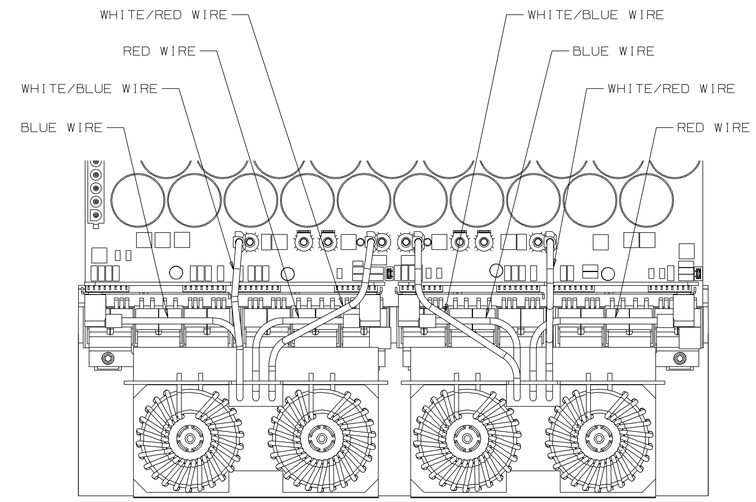

NOTES:
1) APPLY HEATSINK COMPOUND (ITEM 18) TO ITEMS 7 AND 9 APPROXIMATELY .008 THICK.
2) PLACE DROP OF HEATSINK COMPOUND (ITEM 18) IN HOLE OF END TRANSISTORS. PLACE THERMAL SENSOR (132095-1) IN HOLE. PLACE FOAM (ITEM 6) ON TOP OF THERMAL SENSOR.
3) ONCE FRONT END BOARD SETTINGS ARE MADE, BOTH THE FRONT END (ITEM 16) AND GATE DRIVE (ITEM 17) BOARDS MUST REMAIN IN THEIR ORIGINAL POSITIONS.

ITEM	QTY	DESCRIPTION	PART NO.
18	X	TYPE 340 HEATSINK COMPOUND	S 2162-6
17	2	PWA; I-TECH 4000 PANEL 2 (GATE DRIVE)	137075-6 (B/C)
16	2	PWA; I-TECH 6K/4K PANEL 1 (FRONT END)	137067-5 (B/C)
15	1	PWA; I-TECH 4000 PANEL 2 (AMP)	137075-6 (A)
14	1	SPCR; 32 PIN DUAL ROW 0.25 BD	132173-1
13	2	SPCR; MINI .250" DUAL LKG PCB	133526-1
12	1	INSULATOR; BCA NOMEX	137339-1
11	1	PWA; I-TECH 4000 PANEL 2 (OUTPUT FILTER)	137075-6 (D)
10	8	SCR; 6-32 X .625 TORX PNHD	103436-10610
9	4	HS; BCA MAIN	131859-3
8	1	CARRIER; NMS AMP COIL	136784-1
7	4	INS; CERAMIC .90 X .75 X .040	D 8958-7
6	2	FOAM; 0.4 X 0.25 W/ADHESIVE	134882-1
5	4	CLIP; TO-220 SIX FINGER	132569-3
4	12	SCREW; 6-32 X .375 TORX PNHD SEM	103415-70606
3	2	INSULATOR; LP/LN COILS BOTTOM	137275-2
2	2	PWA; I-TECH 4000 PANEL 3 (LP/LN COILS)	137101-5 (D/E)
1	2	INSULATOR; NMS LP/LN COILS	136902-1

DISTRIBUTION			
	DWN	RG	9-28-04
	CHK	N/A	N/A
CROWN\MD501	CM		
DWG137682.PRT	PE	RG	9-28-04

TOLERANCE UNLESS OTHERWISE SPECIFIED
.00 = ±.020
.000 = ±.010
ANGLES = ±1.0°

DO NOT SCALE DRAWING

CROWN INTERNATIONAL, INC.
1718 WEST MISHAWAKA RD.
ELKHART, IN 46517
PHONE (574) 294-8000
WWW.CROWNAUDIO.COM

TITLE
DWG; I-T4000 ASM

SIZE D | DWG NO. 137682 | REV 1

SCALE NONE | PROJ NO. MD501 | SHEET 1 OF 6

UNCONTROLLED
UNLESS OTHERWISE MARKED IN RED INK BY CM AS A CONTROLLED COPY, COPIES OF THESE DOCUMENTS AND ASSOCIATED ELECTRONIC FILES ARE UNCONTROLLED AND ARE FOR REFERENCE ONLY.

THESE DRAWINGS, SPECIFICATIONS AND ASSOCIATED ELECTRONIC FILES ARE THE PROPERTY OF CROWN INTERNATIONAL, INC. AND SHALL NOT BE REPRODUCED, COPIED, OR USED AS THE BASIS FOR THE MANUFACTURE OR SALE OF APPARATUS OR DEVICES WITHOUT PERMISSION.

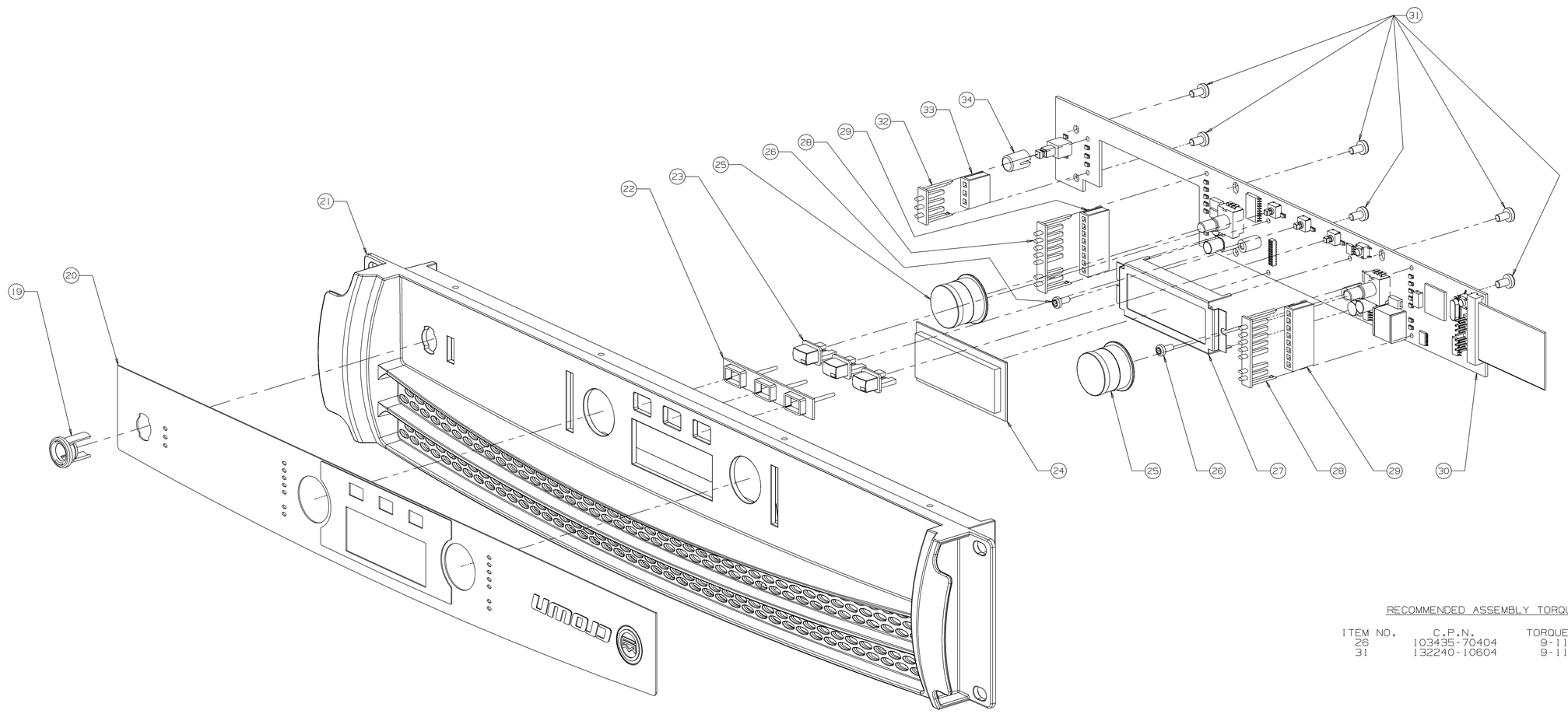

RECOMMENDED ASSEMBLY TORQUES

ITEM NO.	C.P.N.	TORQUE SETTINGS
26	103435-70404	9-11 IN LBS
31	132240-10604	9-11 IN LBS

ITEM	QTY	DESCRIPTION	PART NO.
34	1	PUSHBUTTON; NMS POWER	136779-1
33	1	SHADOWBOX; NMS POWER	136777-1
32	1	LIGHTPIPE; NMS POWER	136776-1
31	33	MSCR; 6-32 X .250 TORX PNHD NYLOK	132240-10604
30	1	PWA; I-TECH 6K/4K PANEL I (DISPLAY)	137067-5 (A)
29	2	SHADOWBOX; NMS DISPLAY	136775-1
28	2	LIGHTPIPE; NMS DISPLAY	136774-1
27	1	LCD; DG-12232-29C-SNBLW	136959-1
26	2	4-40 X .25 TORX PNHD SEMS MSCR	103435-70404
25	2	KNOB; ROTARY ENCODER	136617-1
24	1	LENS; NMS LCD	136619-1
23	3	SWITCH CAP; NMS LCD	136629-1
22	1	BEZEL; NMS LCD SWITCH CAP	136628-1
21	1	PANEL; I-TECH FRONT PC	137798-1
20	1	FACEPLATE; I-T4000	137197-2
19	1	GROMMET; NMS POWER	136778-1

UNCONTROLLED
UNLESS OTHERWISE MARKED IN RED INK BY CW AS A CONTROLLED COPY, COPIES OF THESE DOCUMENTS AND ASSOCIATED ELECTRONIC FILES ARE UNCONTROLLED AND ARE FOR REFERENCE ONLY.

THESE DRAWINGS, SPECIFICATIONS AND ASSOCIATED ELECTRONIC FILES ARE THE PROPERTY OF CROWN INTERNATIONAL, INC. AND SHALL NOT BE REPRODUCED, COPIED, OR USED AS THE BASIS FOR THE MANUFACTURE OR SALE OF APPARATUS OR DEVICES WITHOUT PERMISSION.

TOLERANCE UNLESS OTHERWISE SPECIFIED
.00 = ±.020
.000 = ±.010
ANGLES = ±1.0°

crown INTERNATIONAL, INC.
1718 WEST MISHAWAKA RD.
ELKHART, IN 46517
PHONE (574) 294-8000
WWW.CROWNAUDIO.COM

SIZE D | DWG NO. 137682 | REV 1

DO NOT SCALE DRAWING | SCALE NONE | PROJ NO. MD501 | SHEET 2 OF 6

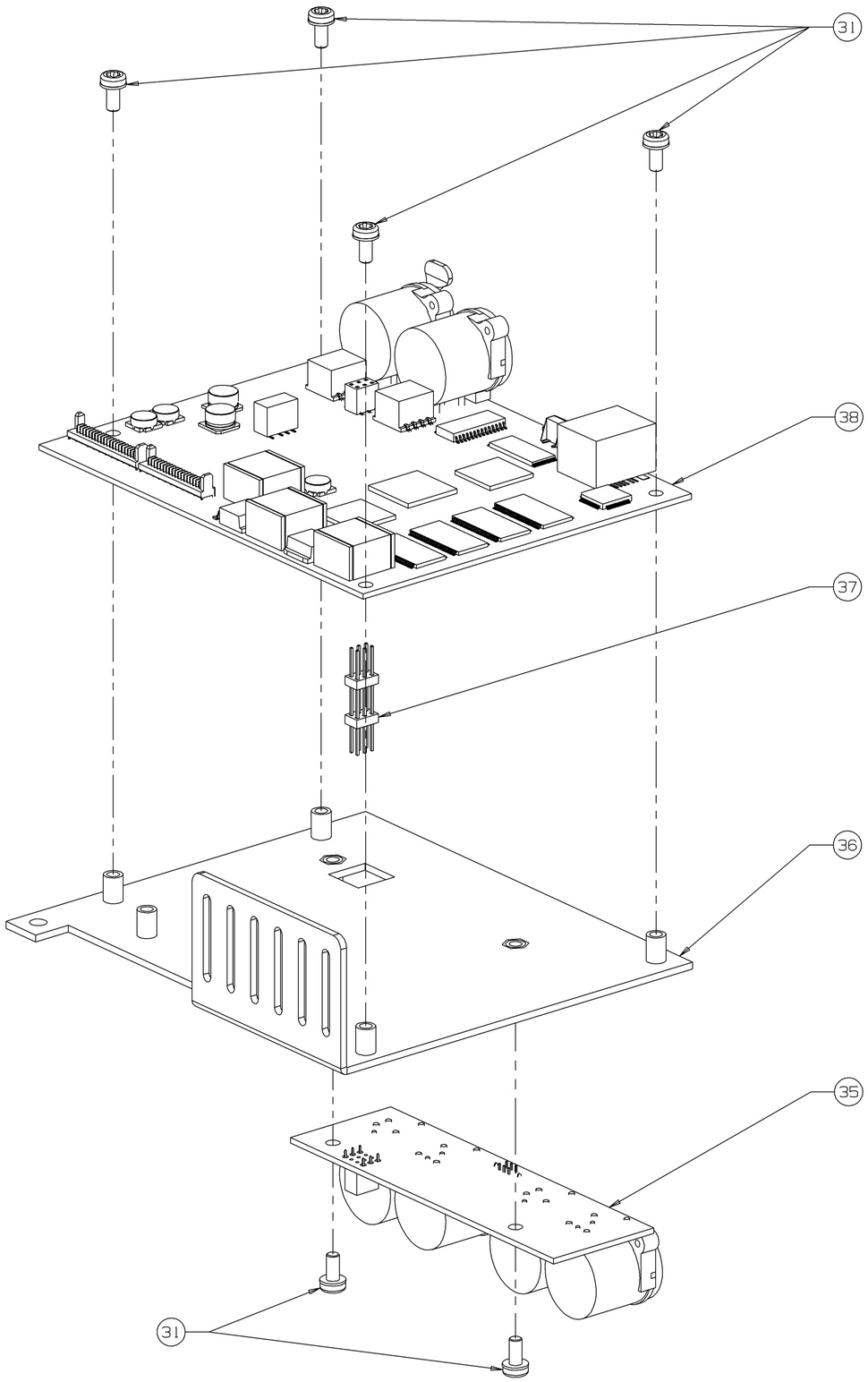

RECOMMENDED ASSEMBLY TORQUES

ITEM NO.	C.P.N.	TORQUE SETTINGS
31	132240-10604	9-11 IN LBS

ITEM	QTY	DESCRIPTION	PART NO.
38	1	PWA; USP3T MAIN	136871-6
37	1	HDR; 6 POS MALE DUAL ROW 0.1"	136890-1
36	1	BRKT; NMS USP PIP	136697-3
35	1	PWA; I-TECH 4000 PANEL 2 (PIP XLR)	137075-6 (H)

UNCONTROLLED
UNLESS OTHERWISE MARKED IN RED INK BY CM AS A CONTROLLED COPY, COPIES OF THESE DOCUMENTS AND ASSOCIATED ELECTRONIC FILES ARE UNCONTROLLED AND ARE FOR REFERENCE ONLY.

THESE DRAWINGS, SPECIFICATIONS AND ASSOCIATED ELECTRONIC FILES ARE THE PROPERTY OF CROWN INTERNATIONAL, INC. AND SHALL NOT BE REPRODUCED, COPIED, OR USED AS THE BASIS FOR THE MANUFACTURE OR SALE OF APPARATUS OR DEVICES WITHOUT PERMISSION.

TOLERANCE UNLESS OTHERWISE SPECIFIED
.00 = ±.020
.000 = ±.010
ANGLES = ±1.0°

DO NOT SCALE DRAWING

CROWN INTERNATIONAL, INC.
1718 WEST MISHAWAKA RD.
ELKHART, IN 46517
PHONE (574) 294-8000
WWW.CROWNAUDIO.COM

SIZE C | DWG NO. 137682 | REV 1

SCALE NONE | PROJ NO. MD501 | SHEET 3 OF 6

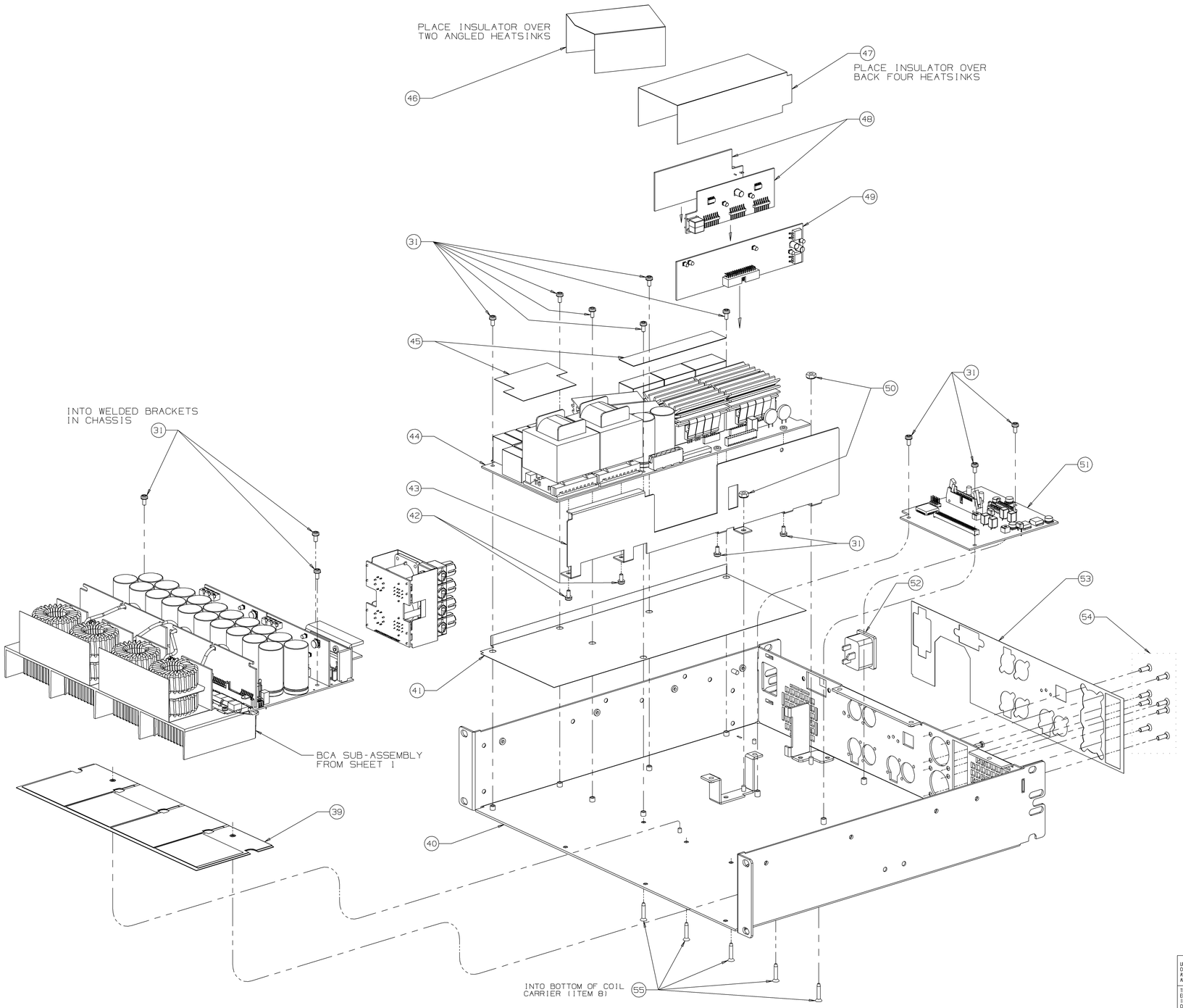

RECOMMENDED ASSEMBLY TORQUES

ITEM NO.	C.P.N.	TORQUE SETTINGS
42	103415-70604	9-11 IN LBS
50	A11056-2	9-11 IN LBS
54	101087-70808	5- 7 IN LBS
55	133669-1	9-11 IN LBS

ITEM	QTY	DESCRIPTION	PART NO.
55	9	SCREW; FLT HD BLK .75" TYPE BT	133669-1
54	8	8-32 X .5 UNDCT FLTHD T15 TT BZ	101087-70808
53	1	OVERLAY; NMS BACK	136952-2
52	1	INLET; 20 AMP IEC	136854-1
51	1	PWA; I-TECH 4000 PANEL 2 (INPUT)	137075-6 (E)
50	4	8-32 HEX NUT W/ BELLE	A11056-2
49	1	PWA; I-TECH 4000 PANEL 3 (CONTROL)	137101-5 (C)
48	2	PWA; I-TECH 4000 PANEL 2 (GATE DRIVE)	137075-6 (F/G)
47	1	INSULATOR; NMS SMPS HS	136901-2
46	1	INSULATOR; RECTIFIER HEATSINK	137511-1
45	1	COVER; NMS SMPS CAP	137237-2
44	1	PWA; I-TECH 4000 PANEL 3 (SMPS)	137101-5 (A)
43	1	SHIELD; NMS POWER SUPPLY	136693-2
42	2	SCREW; 6-32 X .25 TORX PNHD SEM	103415-70604
41	1	INSULATOR; NMS SMPS	136900-2
40	1	CHASSIS; NMS	136672-4
39	1	SHIELD; BCA FARADAY	137340-1

UNCONTROLLED
UNLESS OTHERWISE MARKED IN RED INK BY QW AS A CONTROLLED COPY, COPIES OF THESE DOCUMENTS AND ASSOCIATED ELECTRONIC FILES ARE UNCONTROLLED AND ARE FOR REFERENCE ONLY.

THESE DRAWINGS, SPECIFICATIONS AND ASSOCIATED ELECTRONIC FILES ARE THE PROPERTY OF CROWN INTERNATIONAL, INC. AND SHALL NOT BE REPRODUCED, COPIED, OR USED AS THE BASIS FOR THE MANUFACTURE OR SALE OF APPARATUS OR DEVICES WITHOUT PERMISSION.

TOLERANCE UNLESS OTHERWISE SPECIFIED
.00 = ±.020
.000 = ±.010
ANGLES = ±1.0°

DO NOT SCALE DRAWING

crown INTERNATIONAL, INC.
1718 WEST MISHAWAKA RD.
ELKHART, IN 46517
PHONE (574) 294-8000
WWW.CROWNAUDIO.COM

SIZE D | DWG NO. 137682 | REV 1

SCALE NONE | PROJ NO. M0501 | SHEET 4 OF 6

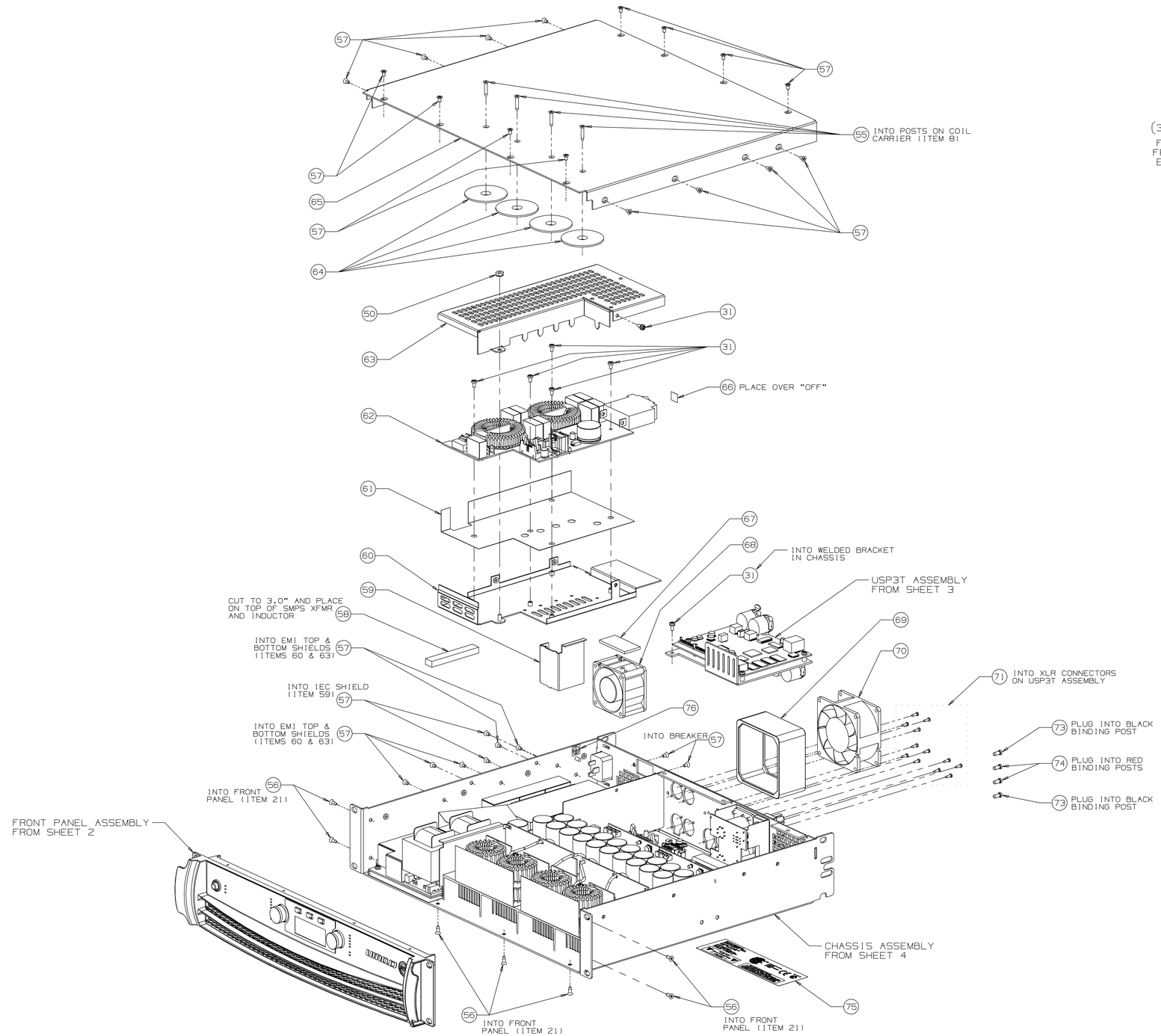

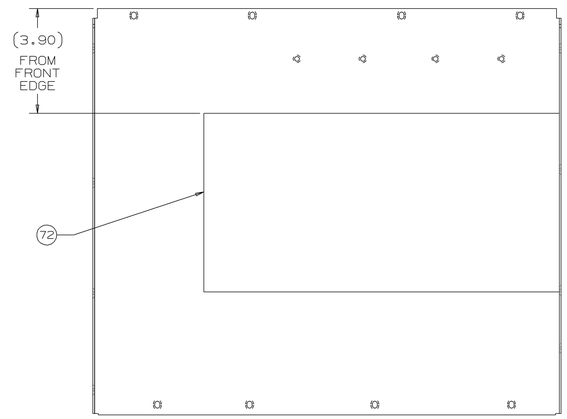

INSIDE VIEW OF REMOVABLE COVER

USE PRODUCTION TEMPLATE FOR LOCATING FOAM

RECOMMENDED ASSEMBLY TORQUES

ITEM NO.	C.P.N.	TORQUE SETTINGS
31	132240-10604	9-11 IN LBS
50	A11056-2	9-11 IN LBS
55	133689-1	9-11 IN LBS
56	134232-1	9-11 IN LBS
57	133653-1	9-11 IN LBS
71	137262-1	7- 9 IN LBS

ITEM	QTY	DESCRIPTION	PART NO.
76	1	LABEL; VDE EARTH GROUND	D 7037-1
75	1	LABEL; AGENCY CSA	134395-2
74	2	PLUG; TERMINAL BLANKING RED	C10185-4
73	2	PLUG; TERMINAL BLANKING BLACK	C10186-2
72	1	FOAM; 13.2 X 6.65 W/ADHESIVE	134345-1
71	12	SCR; M2.5 X 8MM PNHD TORX TRI-LOB	137262-1
70	1	FAN; 80 X 80 X 38MM 18V 80CFM	136875-1
69	1	GROMMET; 80 X 38MM FAN	136950-2
68	1	FAN; 60x60x38MM 18V 50CFM	137152-1
67	2	FOAM; 2.0 X 1.0 W/ADHESIVE	137244-1
66	1	LABEL; BREAKER "OFF" COVER	137307-2
65	1	COVER; NMS REMOVABLE	136718-3
64	4	CAP; CE4000 2.125 OD TOROID	127748-1
63	1	SHIELD; NMS EMI TOP	136700-2
62	1	PWA; I-TECH 4000 PANEL 3 (EMI)	137101-5 (B)
61	1	INSULATOR; NMS EMI PWA	136903-3
60	1	SHIELD; NMS EMI BOTTOM	136711-4
59	1	SHIELD; NMS IEC	137219-2
58	1/3	FOAM; SILICON BASED W/ADHESIVE	136850-1
57	25	MSCR; 6-32 X .25 FLTHD T15 BZ	133653-1
56	7	SCR; #6-32 X .375 FLAT HD T15	134232-1

UNCONTROLLED
UNLESS OTHERWISE MARKED IN RED INK BY QW AS A CONTROLLED COPY, COPIES OF THESE DOCUMENTS AND ASSOCIATED ELECTRONIC FILES ARE UNCONTROLLED AND ARE FOR REFERENCE ONLY.

THESE DRAWINGS, SPECIFICATIONS AND ASSOCIATED ELECTRONIC FILES ARE THE PROPERTY OF CROWN INTERNATIONAL, INC. AND SHALL NOT BE REPRODUCED, COPIED, OR USED AS THE BASIS FOR THE MANUFACTURE OR SALE OF APPARATUS OR DEVICES WITHOUT PERMISSION.

TOLERANCE UNLESS OTHERWISE SPECIFIED
.00 = ±.020
.000 = ±.010
ANGLES = ±1.0°

DO NOT SCALE DRAWING

crown INTERNATIONAL, INC.
1718 WEST MISHAWAKA RD.
ELKHART, IN 46517
PHONE (574) 294-8000
WWW.CROWNAUDIO.COM

SIZE D | DWG NO. 137682 | REV 1

SCALE NONE | PROJ NO. MD501 | SHEET 5 OF 6

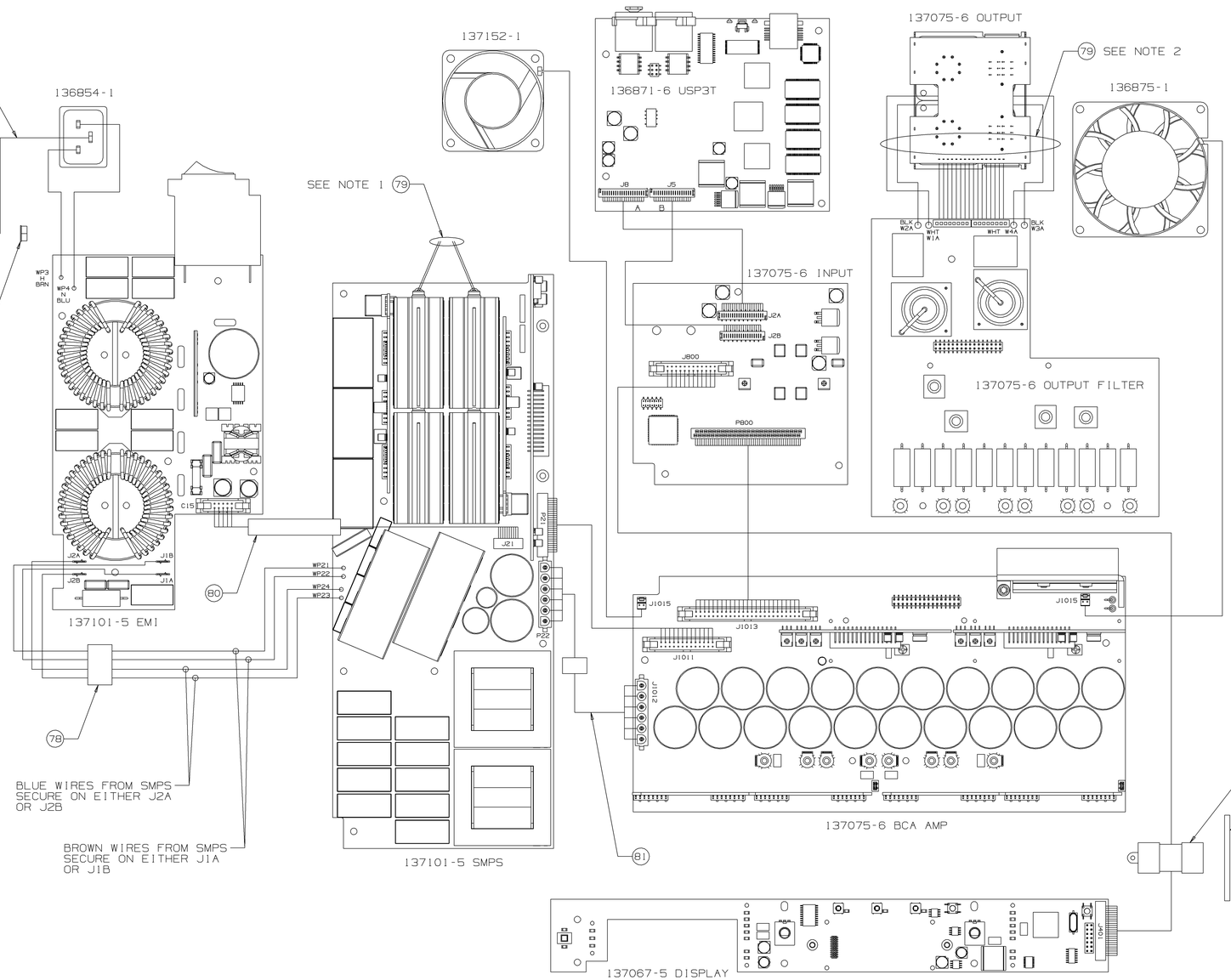

RECOMMENDED ASSEMBLY TORQUES

ITEM NO.	C.P.N.	TORQUE SETTINGS
50	A11056-2	9-11 IN LBS

NOTES:
1) TIE WRAP, USING ITEM 79, THE FOUR THERMISTOR WIRES BEHIND HEATSINKS.
2) TIE WRAP, USING ITEM 79, THE TWO PAIRS OF BLACK AND WHITE WIRES TOGETHER, LEAVING APPROX. 1/2" BETWEEN PAIRS.
3) SLIDE TAB BETWEEN COIL CARRIER (ITEM 8) AND CHASSIS SIDE (ITEM 40).
4) PLACE FOAM ON TOP OF FERRITE.

ITEM	QTY	DESCRIPTION	PART NO.
82	2	FERRITE; 26POS RBN 1/2 SET	137345-1
81	1	CABLE; NMS SMPS TO AMP	137063-1
80	1	TUBE; SHRINK BLK .75 X 2.0	A11701-020
79	2	TIE; CABLE 4" OR MORE 18 LB	C 1811-6
78	1	FERRITE; ROUND CLAMP ON	137516-1
77	1	WIRE; 3.25" 14GA GRN/YEL FST/RG	137081-1

UNCONTROLLED
UNLESS OTHERWISE MARKED IN RED INK BY QM AS A CONTROLLED COPY, COPIES OF THESE DOCUMENTS AND ASSOCIATED ELECTRONIC FILES ARE UNCONTROLLED AND ARE FOR REFERENCE ONLY.

THESE DRAWINGS, SPECIFICATIONS AND ASSOCIATED ELECTRONIC FILES ARE THE PROPERTY OF CROWN INTERNATIONAL, INC. AND SHALL NOT BE REPRODUCED, COPIED, OR USED AS THE BASIS FOR THE MANUFACTURE OR SALE OF APPARATUS OR DEVICES WITHOUT PERMISSION.

TOLERANCE UNLESS OTHERWISE SPECIFIED
.00 = ±.020
.000 = ±.010
ANGLES = ±1.0°

crown INTERNATIONAL, INC.
1718 WEST MISHAWAKA RD.
ELKHART, IN 46517
PHONE (574) 294-8000
WWW.CROWNAUDIO.COM

SIZE D | DWG NO. 137682 | REV 1

DO NOT SCALE DRAWING | SCALE NONE | PROJ NO. M0501 | SHEET 6 OF 6

REVISION HISTORY							
E. C. N.	ZONE	REV	DESCRIPTION	DATE	APPROVED		
					DWN	CM	PE
		A	SEE 137067-5_A.XLS FOR DATA AND REVISION HISTORY	04/20/04	TLM	KZ	TJS
05N0057		B	SEE 137067-5_B.XLS FOR DATA AND REVISION HISTORY	01/27/05	TLM	KZ	TJS

COMPONENT MAP
TOP SIDE

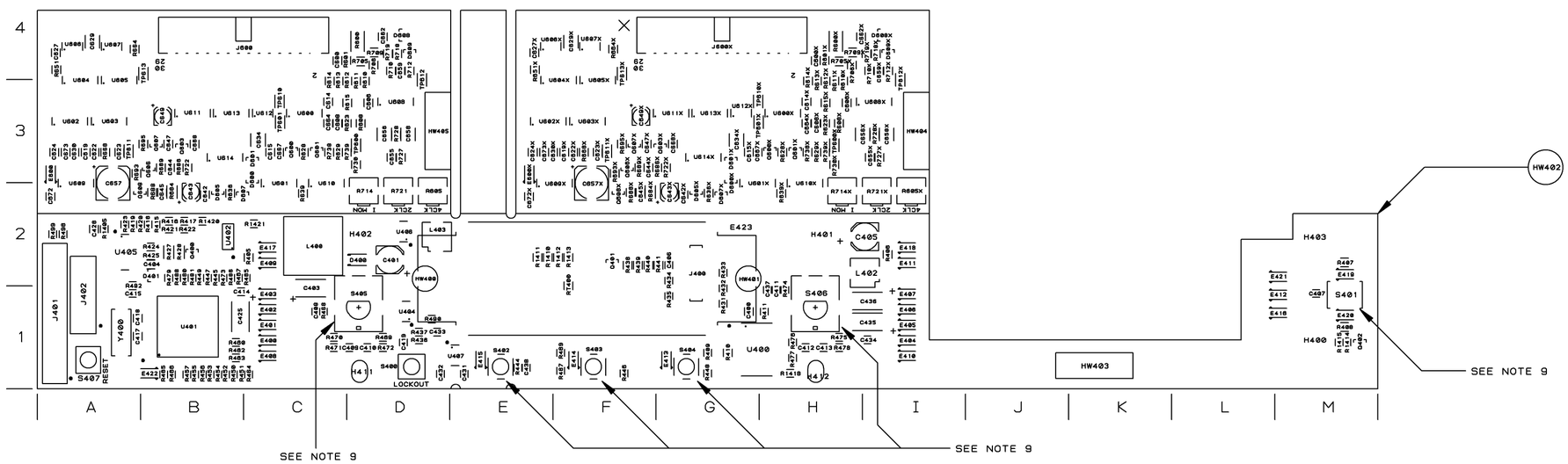

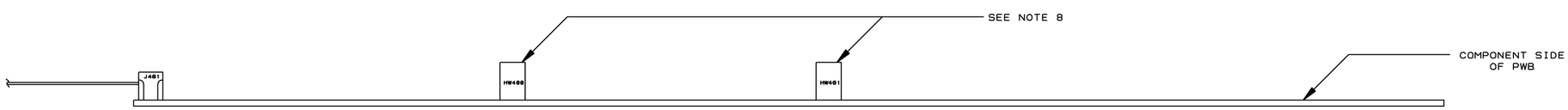

UNCONTROLLED
UNLESS OTHERWISE MARKED IN RED INK BY CM AS A CONTROLLED COPY, COPIES OF THESE DOCUMENTS INCLUDING ASSOCIATED ELECTRONIC REPRODUCTIONS ARE FOR REFERENCE ONLY. VERIFY LATEST REVISION PRIOR TO USE.

THESE DRAWINGS AND SPECIFICATIONS ARE THE PROPERTY OF CROWN INTERNATIONAL, INC. AND SHALL NOT BE REPRODUCED, COPIED, OR USED AS THE BASIS FOR THE MANUFACTURE OR SALE OF APPARATUS OR DEVICES WITHOUT PERMISSION.

DISTRIBUTION	DWN	TLM	04/20/04
K	CM	KZ	04/29/04
FILENAME	PE	TJS	04/20/04
137067-5_B.TIF			
TOLERANCE UNLESS OTHERWISE SPECIFIED			
.00 = ±.02"			
.000 = ±.010"			
DRILLS = ±.003"			
DO NOT SCALE DRAWING			

CROWN INTERNATIONAL, INC.
1718 W. MISHAWAKA RD.
ELKHART IN, 46517
PHONE 574-294-8000
WWW.CROWNAUDIO.COM

TITLE
PWA, I-TECH 6K / 4K PANEL 1

SIZE	DWG NO.	REV
C	137067-5	B

SCALE NONE | PROJ NO. MD501Z0 | SHEET 1 OF 5

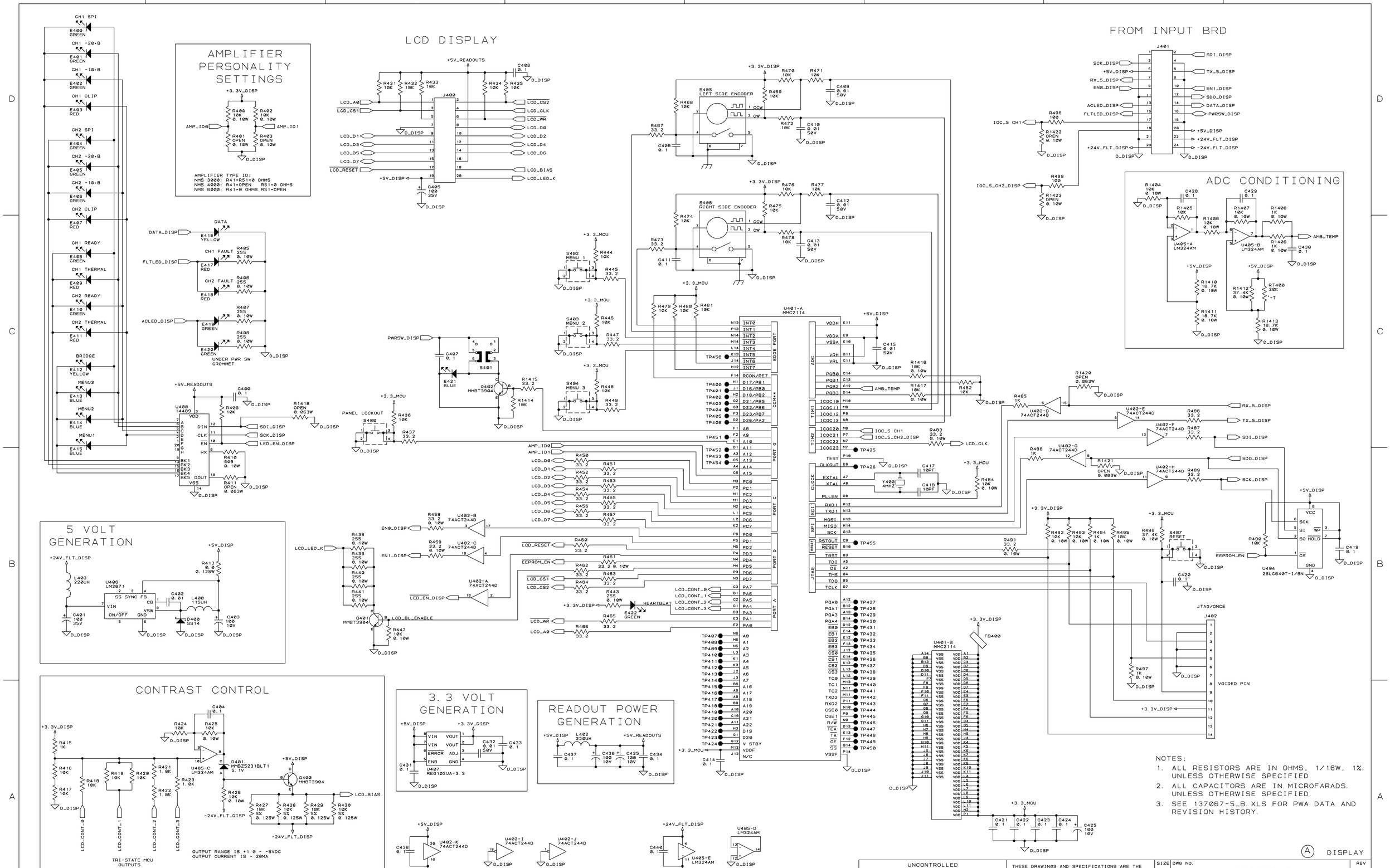
AMPLIFIER PERSONALITY SETTINGS
AMPLIFIER TYPE ID:
NMS 3000: R41=R51=0 OHMS
NMS 4000: R41=OPEN R51=0 OHMS
NMS 6000: R41=0 OHMS R51=OPEN
LCD DISPLAY
FROM INPUT BRD
ADC CONDITIONING
5 VOLT GENERATION
CONTRAST CONTROL
3.3 VOLT GENERATION
READOUT POWER GENERATION
TRI-STATE MCU OUTPUTS
OUTPUT RANGE IS +1.0 - -5VDC
OUTPUT CURRENT IS ~ 20MA
VOIDED PIN
NOTES:
1. ALL RESISTORS ARE IN OHMS, 1/16W, 1%. UNLESS OTHERWISE SPECIFIED.
2. ALL CAPACITORS ARE IN MICROFARADS. UNLESS OTHERWISE SPECIFIED.
3. SEE 137067-5_B.XLS FOR PWA DATA AND REVISION HISTORY.
A DISPLAY
UNCONTROLLED
UNLESS OTHERWISE MARKED IN RED INK BY CM AS A CONTROLLED COPY, COPIES OF THESE DOCUMENTS INCLUDING ASSOCIATED ELECTRONIC REPRODUCTIONS ARE FOR REFERENCE ONLY.
THESE DRAWINGS AND SPECIFICATIONS ARE THE PROPERTY OF CROWN INTERNATIONAL, INC. AND SHALL NOT BE REPRODUCED, COPIED, OR USED AS THE BASIS FOR THE MANUFACTURE OR SALE OF APPARATUS OR DEVICES WITHOUT PERMISSION.
SIZE D
DWG NO. 137067-5
REV B
SCALE NONE
PROJ NO. MD5010
SHEET 3 OF 5

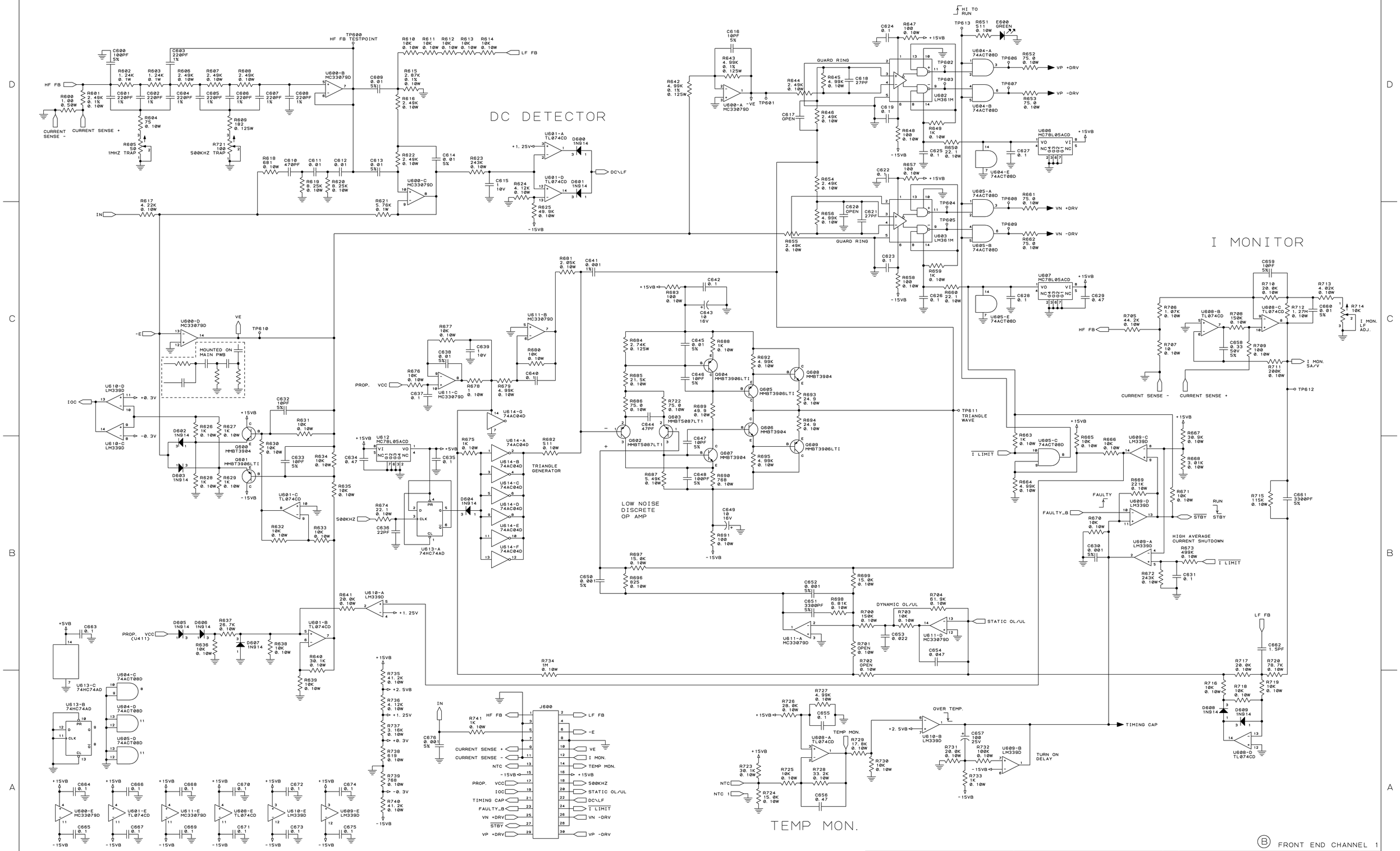

B FRONT END CHANNEL 1

UNCONTROLLED	THESE DRAWINGS AND SPECIFICATIONS ARE THE PROPERTY OF CROWN INTERNATIONAL, INC. AND SHALL NOT BE REPRODUCED, COPIED, OR USED AS THE BASIS FOR THE MANUFACTURE OR SALE OF APPARATUS OR DEVICES WITHOUT PERMISSION.	SIZE D	DWG NO. 137067-5	REV B
UNLESS OTHERWISE MARKED IN RED INK BY CM AS A CONTROLLED COPY, COPIES OF THESE DOCUMENTS INCLUDING ASSOCIATED ELECTRONIC REPRODUCTIONS ARE FOR REFERENCE ONLY.		SCALE NONE	PROJ NO. MD501D0	SHEET 4 OF 5

REVISION HISTORY							
E.C.N.	ZONE	REV	DESCRIPTION	DATE	APPROVED		
					DWN	CM	PE
		A	SEE 137075-7_A.XLS FOR DATA AND REVISION HISTORY	09/24/04	TLM	DSV	AA

COMPONENT MAP
TOP SIDE

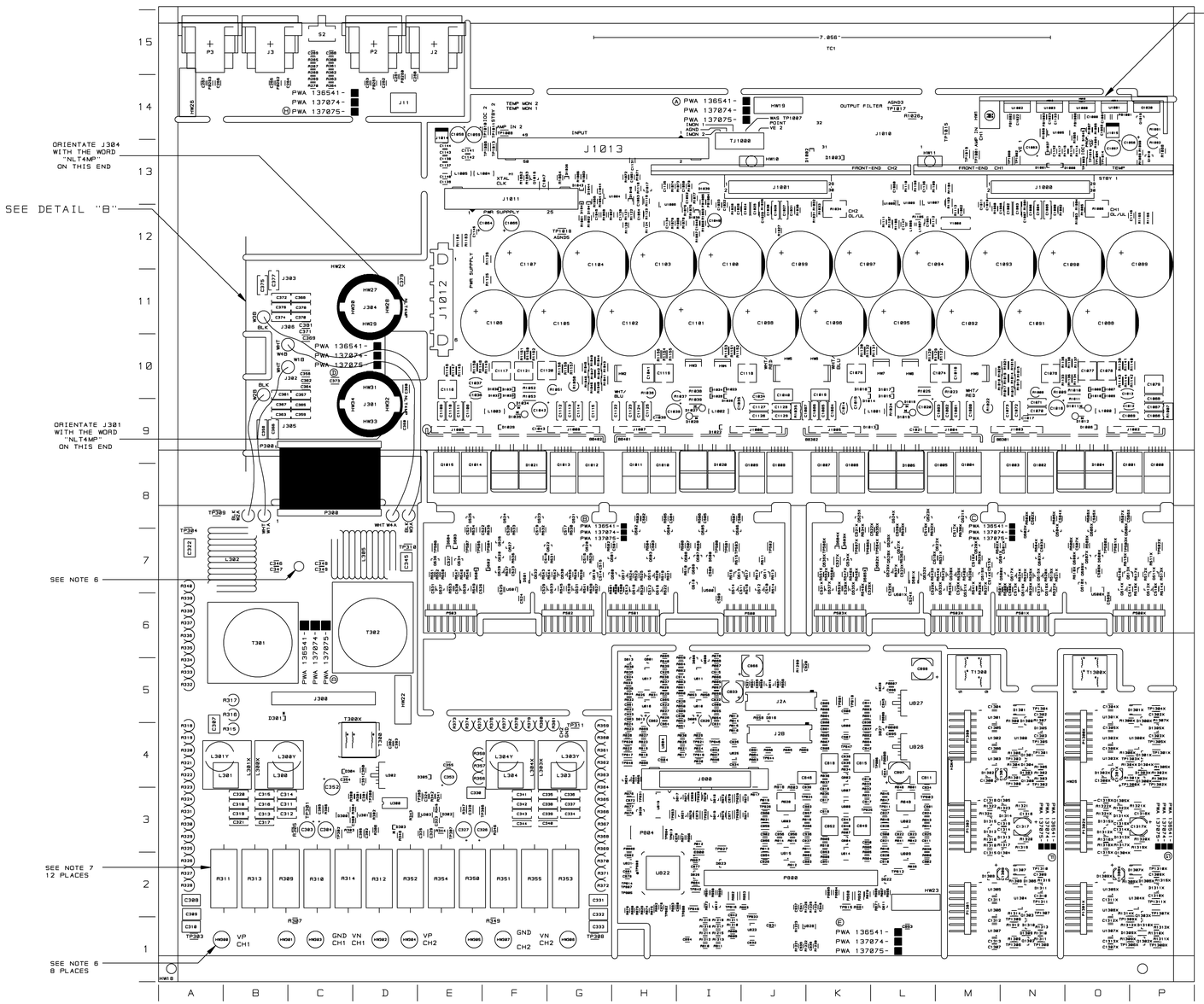

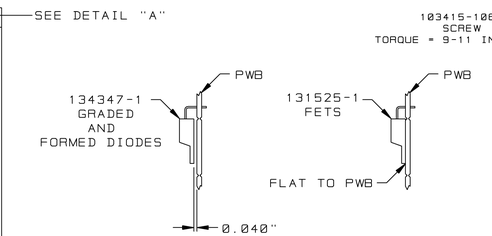

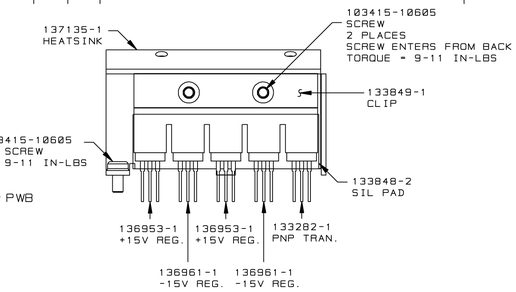

DETAIL "A"
SCALE 1:1

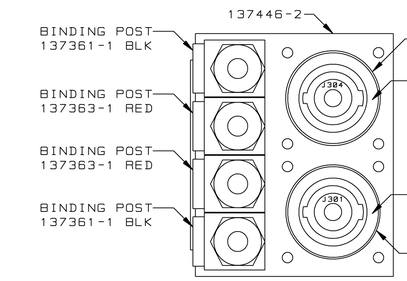

TOP VIEW

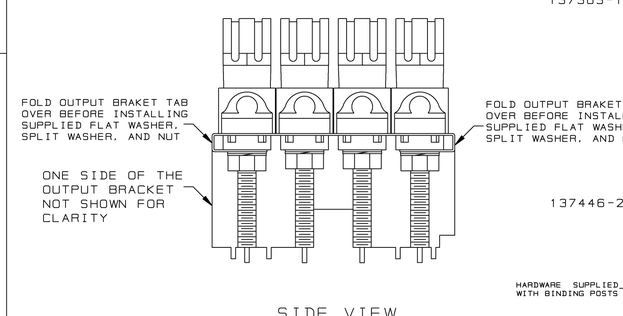

SIDE VIEW

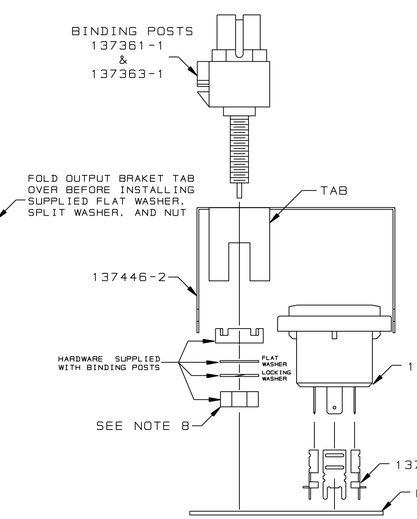

FRONT VIEW

DETAIL "B"
SCALE 1:1

	DWN	TLM	09/24/04
	CM	DSV	10-7-04
DISTRIBUTION	PE	AA	09/24/04
K			

FILENAME
137075-7_A.PCB

TOLERANCE UNLESS OTHERWISE SPECIFIED
.00 = ±.02"
.000 = ±.010"
DRILLS = ±.003"

DO NOT SCALE DRAWING

UNCONTROLLED
UNLESS OTHERWISE MARKED IN RED INK BY CM AS A CONTROLLED COPY. COPIES OF THESE DOCUMENTS INCLUDING ASSOCIATED ELECTRONIC REPRODUCTIONS ARE FOR REFERENCE ONLY.

THESE DRAWINGS AND SPECIFICATIONS ARE THE PROPERTY OF CROWN INTERNATIONAL, INC. AND SHALL NOT BE REPRODUCED, COPIED, OR USED AS THE BASIS FOR THE MANUFACTURE OR SALE OF APPARATUS OR DEVICES WITHOUT PERMISSION.

crown INTERNATIONAL, INC.
1718 W. MISHAWAKA RD.
ELKHART IN. 46517
PHONE 574-294-8000
WWW.CROWNAUDIO.COM

TITLE
PWA, I-TECH 4000 PANEL 2

SIZE	DWG NO.	REV
D	137075-7	A

SCALE NONE | PROJ NO. MD501Z0 | SHEET 1 OF 11

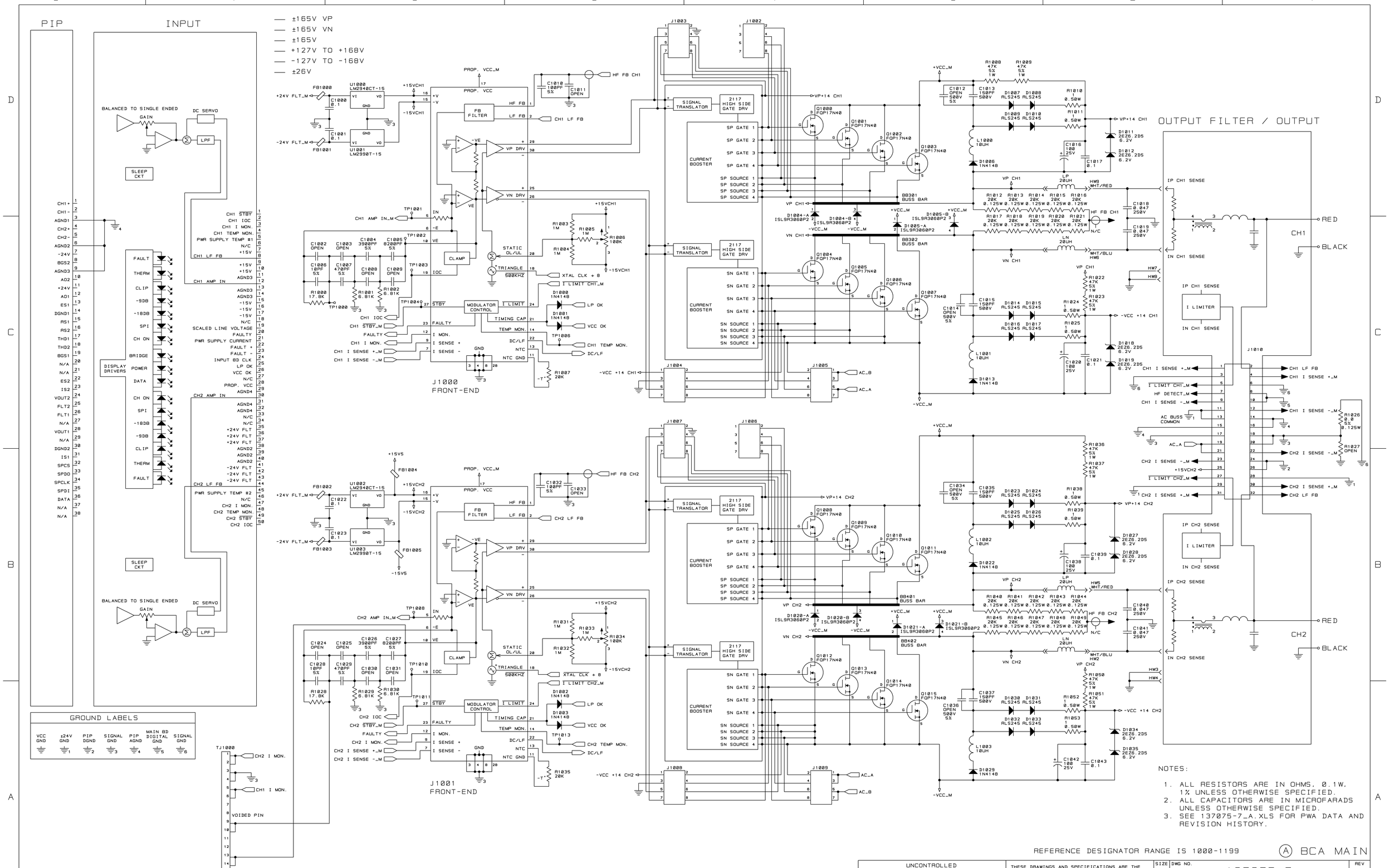
PIP
INPUT
±165V VP
±165V VN
±165V
+127V TO +168V
-127V TO -168V
±26V
BALANCED TO SINGLE ENDED
GAIN
DC SERVO
LPF
SLEEP CKT
DISPLAY DRIVERS
J1000 FRONT-END
J1001 FRONT-END
J1002
J1003
J1004
J1005
J1006
J1007
J1008
J1009
J1010
TJ1000
SIGNAL TRANSLATOR
2117 HIGH SIDE GATE DRV
CURRENT BOOSTER
MODULATOR CONTROL
FB FILTER
CLAMP
STATIC OL/UL
TRIANGLE 500KHZ
BB301 BUSS BAR
BB302 BUSS BAR
BB401 BUSS BAR
BB402 BUSS BAR
OUTPUT FILTER / OUTPUT
I LIMITER
RED
BLACK
CH1
CH2
GROUND LABELS
VCC GND
±24V GND
PIP DGND
SIGNAL GND
PIP AGND
MAIN BD DIGITAL GND
SIGNAL GND
VOIDED PIN
NOTES:
1. ALL RESISTORS ARE IN OHMS, 0.1W, 1% UNLESS OTHERWISE SPECIFIED.
2. ALL CAPACITORS ARE IN MICROFARADS UNLESS OTHERWISE SPECIFIED.
3. SEE 137075-7_A.XLS FOR PWA DATA AND REVISION HISTORY.
REFERENCE DESIGNATOR RANGE IS 1000-1199
BCA MAIN
UNCONTROLLED
UNLESS OTHERWISE MARKED IN RED INK BY CM AS A CONTROLLED COPY, COPIES OF THESE DOCUMENTS INCLUDING ASSOCIATED ELECTRONIC REPRODUCTIONS ARE FOR REFERENCE ONLY.
THESE DRAWINGS AND SPECIFICATIONS ARE THE PROPERTY OF CROWN INTERNATIONAL, INC. AND SHALL NOT BE REPRODUCED, COPIED, OR USED AS THE BASIS FOR THE MANUFACTURE OR SALE OF APPARATUS OR DEVICES WITHOUT PERMISSION.
SIZE D
DWG NO. 137075-7
REV A
SCALE NONE
PROJ NO. MD501Z0
SHEET 2 OF 11

VOLTAGE SPACINGS FOR PWB 131331-1 REV 4
NUMBERS ARE IN THOUSANDTHS

	+127V TO +168V	-127V TO -168V	±165V	±165V VN	±165V VP	±26V
+127V TO +168V	10	45	45	45	45	30
-127V TO -168V	45	10	45	45	45	30
±165V	45	45	45	45	45	30
±165V VN	45	45	45	10	45	30
±165V VP	45	45	45	45	10	30
±26V	30	30	30	30	30	10

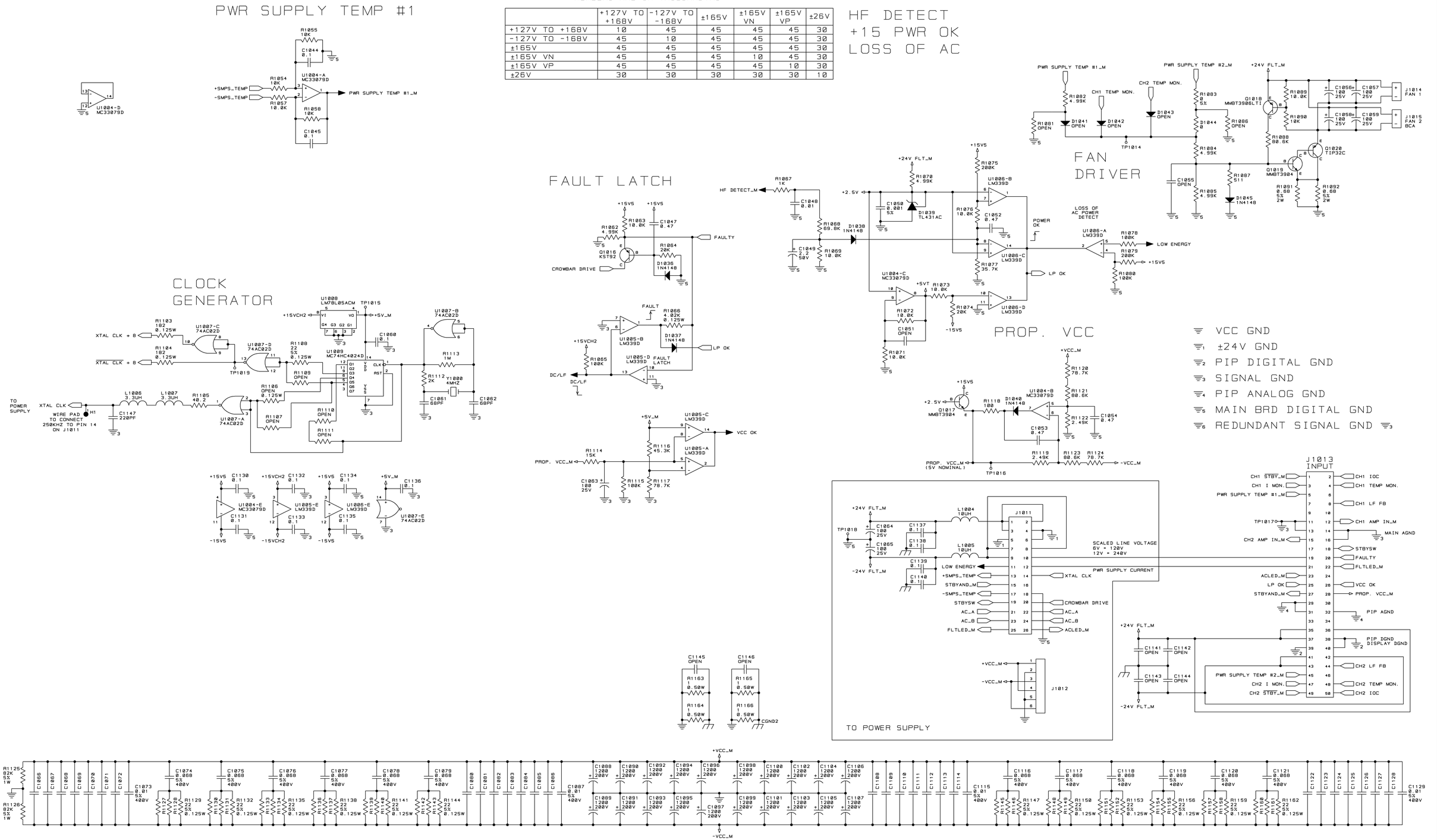

UNCONTROLLED
UNLESS OTHERWISE MARKED IN RED INK BY CM AS A CONTROLLED COPY. COPIES OF THESE DOCUMENTS INCLUDING ASSOCIATED ELECTRONIC REPRODUCTIONS ARE FOR REFERENCE ONLY.

THESE DRAWINGS AND SPECIFICATIONS ARE THE PROPERTY OF CROWN INTERNATIONAL, INC. AND SHALL NOT BE REPRODUCED, COPIED, OR USED AS THE BASIS FOR THE MANUFACTURE OR SALE OF APPARATUS OR DEVICES WITHOUT PERMISSION.

SIZE	DWG NO.	REV
D	137075-7	A
SCALE NONE	PROJ NO. MD5012Q	SHEET 3 OF 11

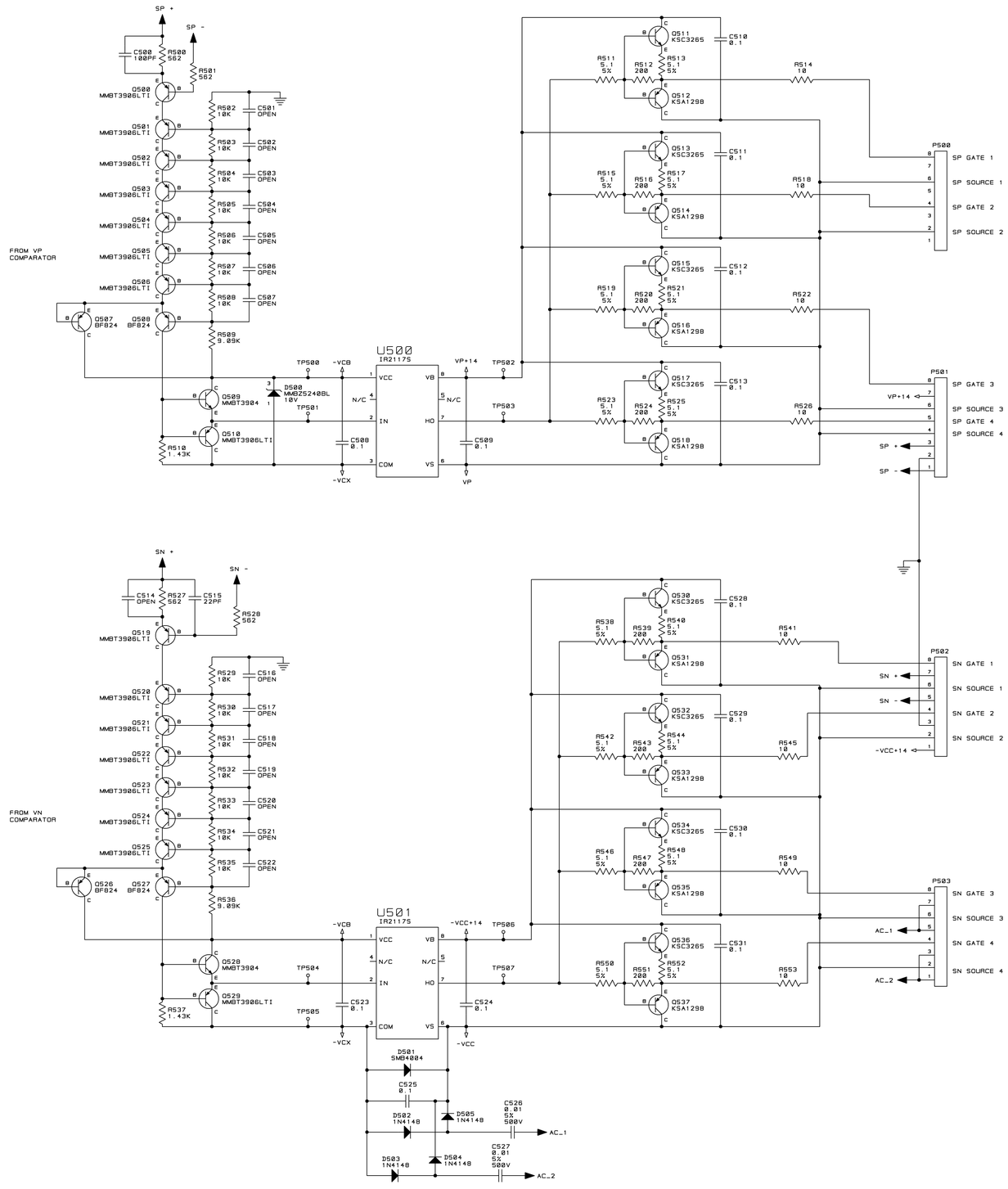

REFERENCE DESIGNATOR RANGE IS 500-599

(B) GATE DRIVE CH1

UNCONTROLLED
UNLESS OTHERWISE MARKED IN RED INK BY CM AS A CONTROLLED COPY. COPIES OF THESE DOCUMENTS INCLUDING ASSOCIATED ELECTRONIC REPRODUCTIONS ARE FOR REFERENCE ONLY.

THESE DRAWINGS AND SPECIFICATIONS ARE THE PROPERTY OF CROWN INTERNATIONAL, INC. AND SHALL NOT BE REPRODUCED, COPIED, OR USED AS THE BASIS FOR THE MANUFACTURE OR SALE OF APPARATUS OR DEVICES WITHOUT PERMISSION.

SIZE	DWG NO.	REV
D	137075-7	A
SCALE NONE	PROJ NO. MD501Z0	SHEET 4 OF 11

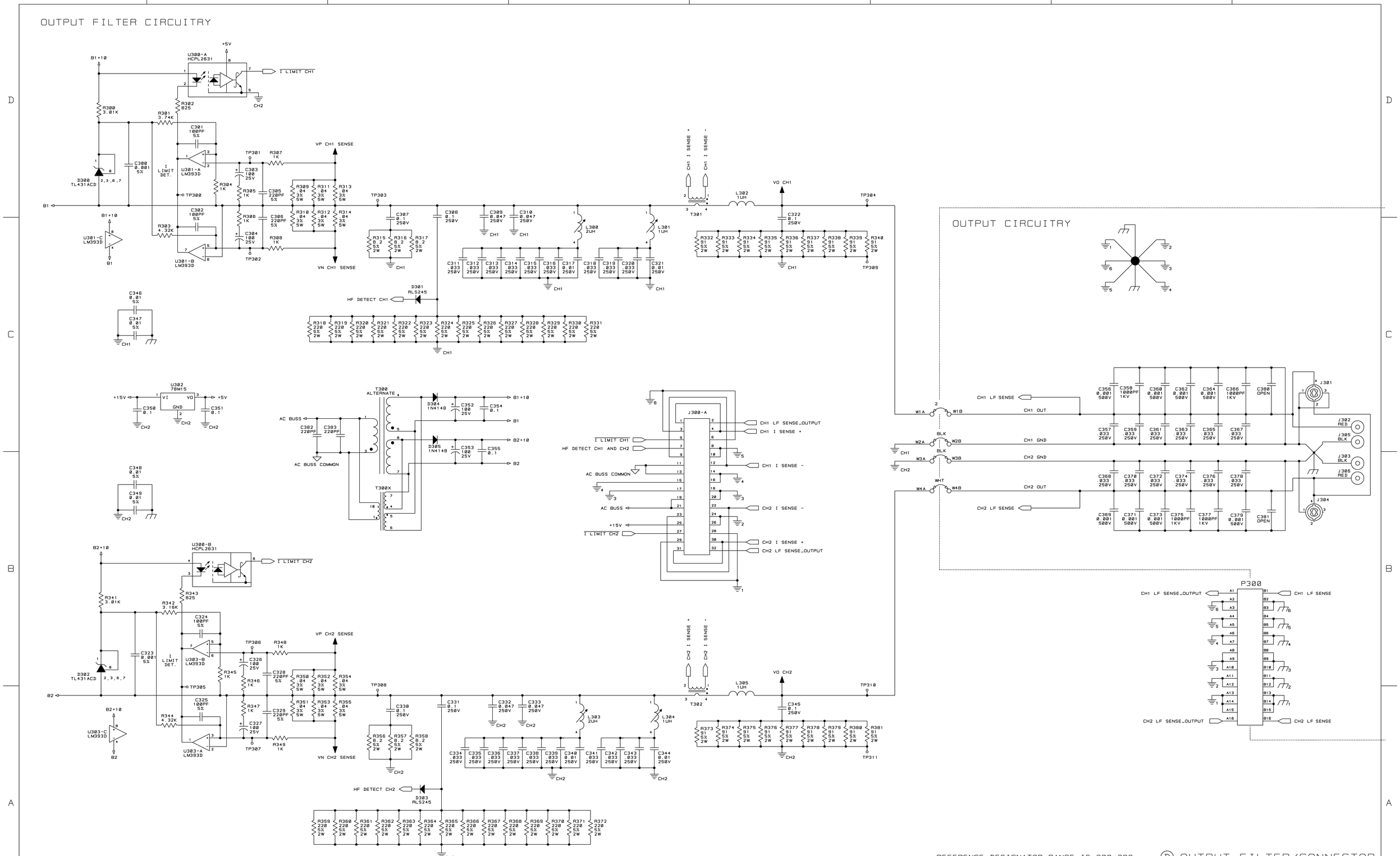
OUTPUT FILTER CIRCUITRY
OUTPUT CIRCUITRY
U300-A HCPL2631
U300-B HCPL2631
U301-A LM393D
U301-B LM393D
U301-C LM393D
U303-A LM393D
U303-B LM393D
D300 TL431ACD
D302 TL431ACD
I LIMIT DET.
I LIMIT CH1
I LIMIT CH2
VP CH1 SENSE
VN CH1 SENSE
VP CH2 SENSE
VN CH2 SENSE
HF DETECT CH1
HF DETECT CH2
D301 RLS245
D303 RLS245
T301
T302
T300 ALTERNATE
T300X
D304 1N4148
D305 1N4148
AC BUSS
AC BUSS COMMON
U302 78M15
J300-A
CH1 LF SENSE_OUTPUT
CH1 I SENSE +
CH1 I SENSE -
CH2 I SENSE -
CH2 I SENSE +
CH2 LF SENSE_OUTPUT
CH1 LF SENSE
CH1 OUT
CH1 GND
CH2 GND
CH2 OUT
CH2 LF SENSE
J301
J302 RED
J305 BLK
J303 BLK
J306 RED
J304
P300
REFERENCE DESIGNATOR RANGE IS 300-399
D OUTPUT FILTER/CONNECTOR
UNCONTROLLED
UNLESS OTHERWISE MARKED IN RED INK BY CM AS A CONTROLLED COPY. COPIES OF THESE DOCUMENTS INCLUDING ASSOCIATED ELECTRONIC REPRODUCTIONS ARE FOR REFERENCE ONLY.
THESE DRAWINGS AND SPECIFICATIONS ARE THE PROPERTY OF CROWN INTERNATIONAL, INC. AND SHALL NOT BE REPRODUCED, COPIED, OR USED AS THE BASIS FOR THE MANUFACTURE OR SALE OF APPARATUS OR DEVICES WITHOUT PERMISSION.
SIZE D
DWG NO. 137075-7
REV A
SCALE NONE
PROJ NO. MD5012Z0
SHEET 6 OF 11

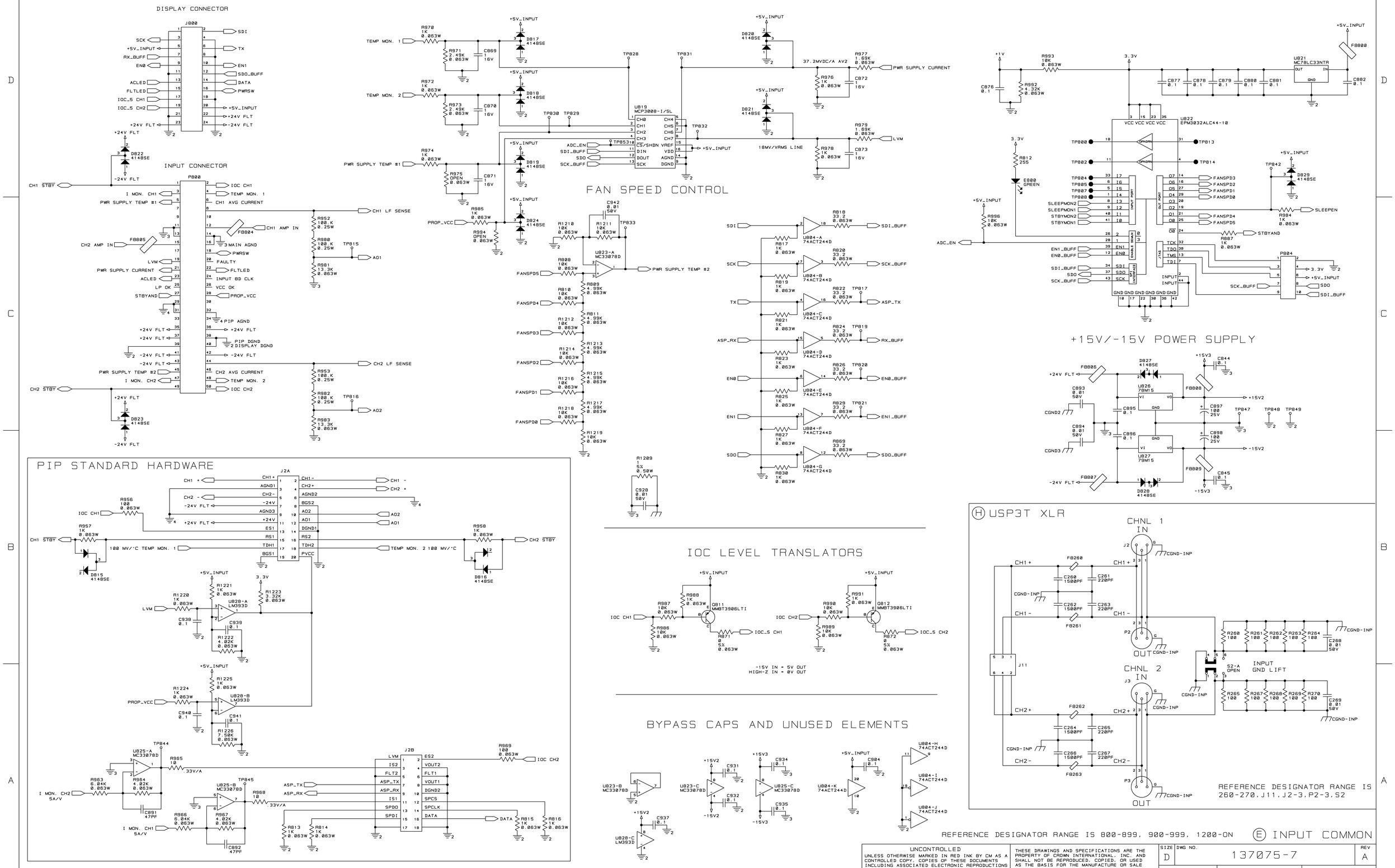
DISPLAY CONNECTOR
INPUT CONNECTOR
FAN SPEED CONTROL
+15V/-15V POWER SUPPLY
PIP STANDARD HARDWARE
IOC LEVEL TRANSLATORS
BYPASS CAPS AND UNUSED ELEMENTS
USP3T XLR
CHNL 1 IN
CHNL 2 IN
INPUT GND LIFT
REFERENCE DESIGNATOR RANGE IS 260-270, J11, J2-3, P2-3, S2
REFERENCE DESIGNATOR RANGE IS 800-899, 900-999, 1200-ON
INPUT COMMON
UNCONTROLLED
UNLESS OTHERWISE MARKED IN RED INK BY CM AS A CONTROLLED COPY. COPIES OF THESE DOCUMENTS INCLUDING ASSOCIATED ELECTRONIC REPRODUCTIONS ARE FOR REFERENCE ONLY.
THESE DRAWINGS AND SPECIFICATIONS ARE THE PROPERTY OF CROWN INTERNATIONAL, INC. AND SHALL NOT BE REPRODUCED, COPIED, OR USED AS THE BASIS FOR THE MANUFACTURE OR SALE OF APPARATUS OR DEVICES WITHOUT PERMISSION.
SIZE D
DWG NO. 137075-7
REV A
SCALE NONE
PROJ NO. MD501Z0
SHEET 7 OF 11

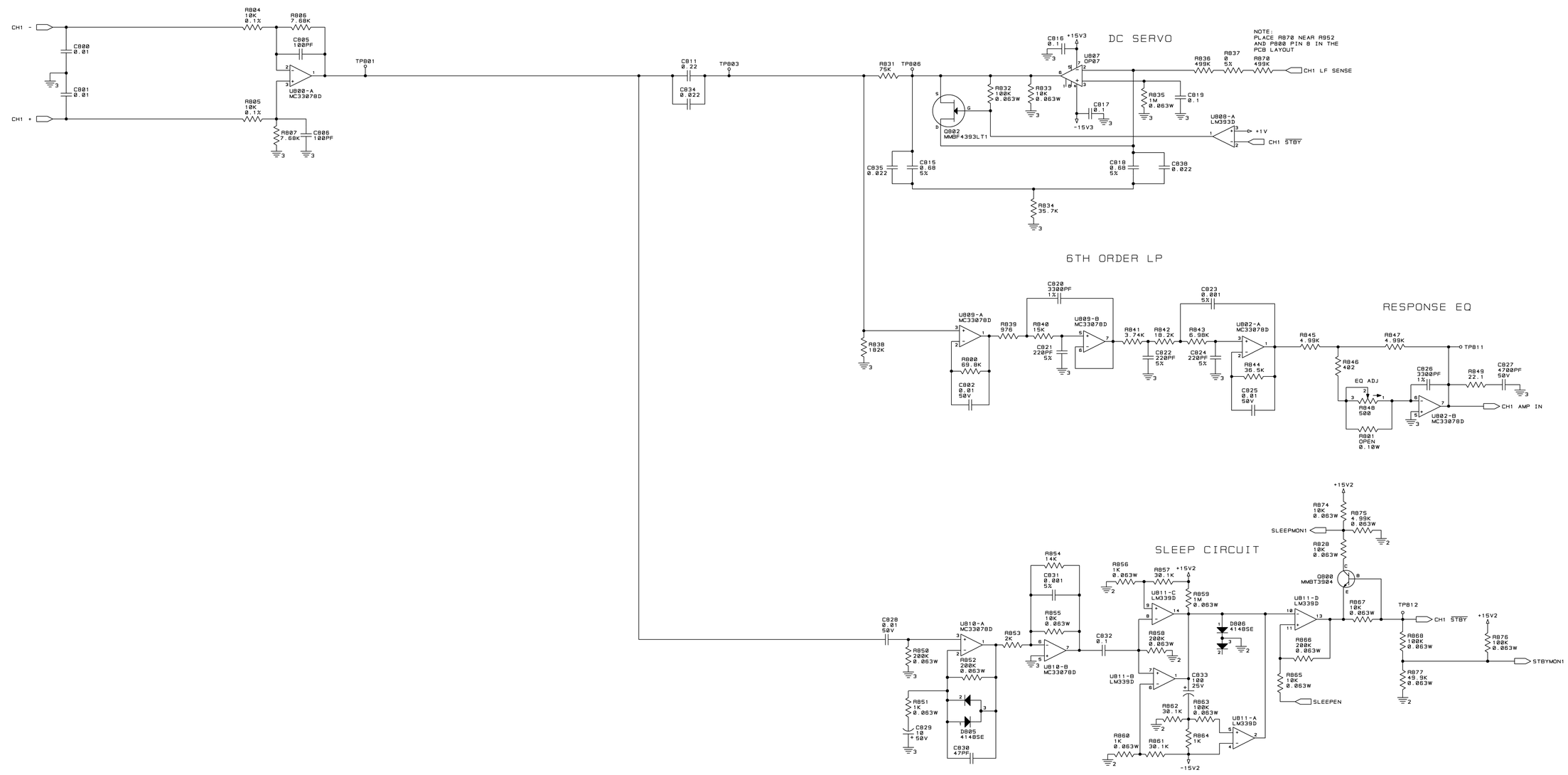

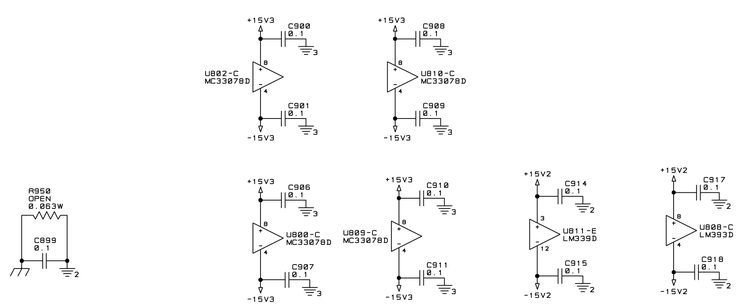

REFERENCE DESIGNATOR RANGE IS 800-899, 900-999, 1200-ON

Ⓔ INPUT CH1

UNCONTROLLED
UNLESS OTHERWISE MARKED IN RED INK BY CM AS A CONTROLLED COPY. COPIES OF THESE DOCUMENTS INCLUDING ASSOCIATED ELECTRONIC REPRODUCTIONS ARE FOR REFERENCE ONLY.

THESE DRAWINGS AND SPECIFICATIONS ARE THE PROPERTY OF CROWN INTERNATIONAL, INC. AND SHALL NOT BE REPRODUCED, COPIED, OR USED AS THE BASIS FOR THE MANUFACTURE OR SALE OF APPARATUS OR DEVICES WITHOUT PERMISSION.

SIZE	DWG NO.	REV
D	137075-7	A
SCALE NONE	PROJ NO. MD5012Ø	SHEET 8 OF 11

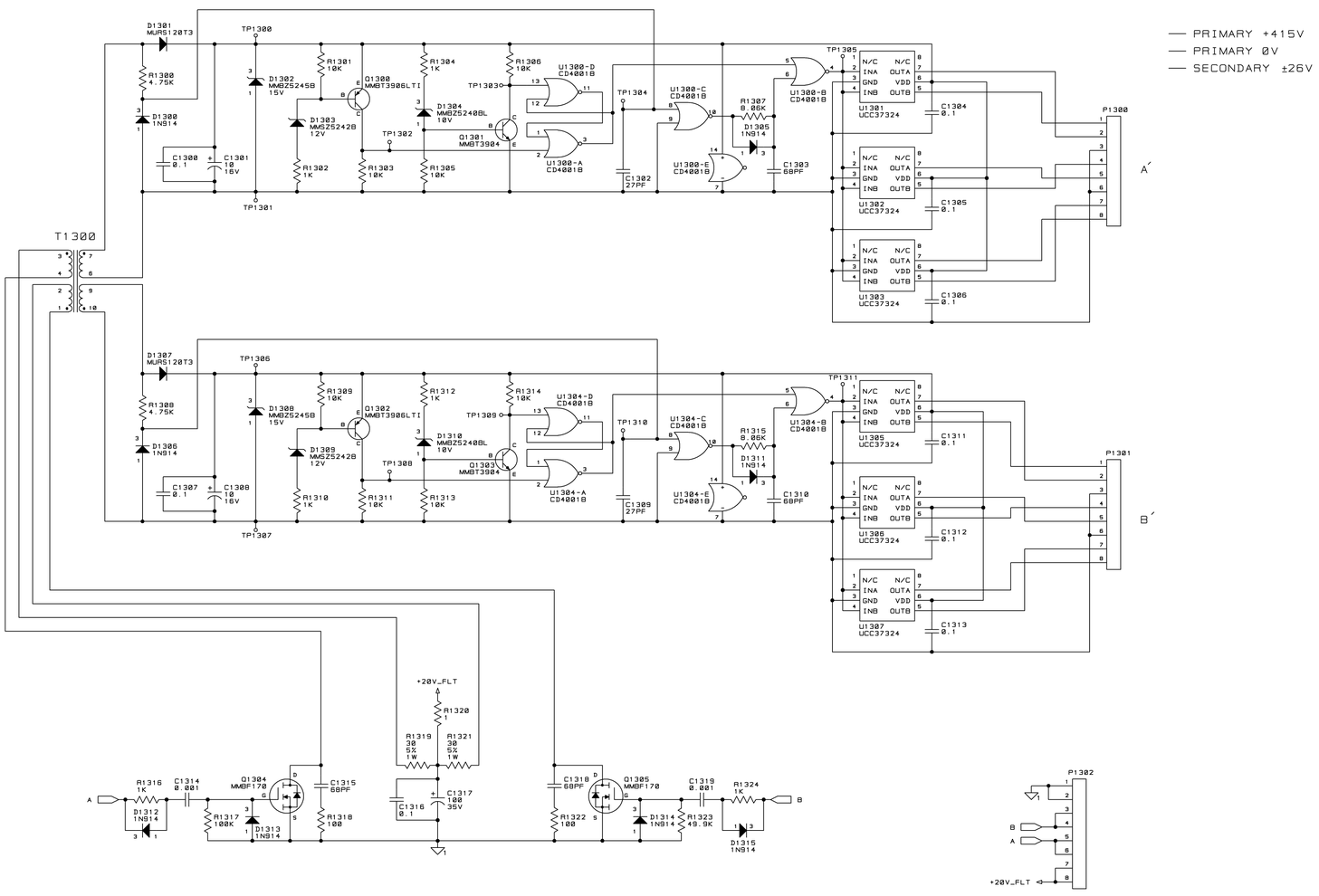

REFERENCE DESIGNATOR RANGE IS 1300-1399

Ⓕ POWER SUPPLY GATE DRIVE CH1

UNCONTROLLED
UNLESS OTHERWISE MARKED IN RED INK BY CM AS A CONTROLLED COPY. COPIES OF THESE DOCUMENTS INCLUDING ASSOCIATED ELECTRONIC REPRODUCTIONS ARE FOR REFERENCE ONLY.

THESE DRAWINGS AND SPECIFICATIONS ARE THE PROPERTY OF CROWN INTERNATIONAL, INC. AND SHALL NOT BE REPRODUCED, COPIED, OR USED AS THE BASIS FOR THE MANUFACTURE OR SALE OF APPARATUS OR DEVICES WITHOUT PERMISSION.

SIZE	DWG NO.	REV
D	137075-7	A

SCALE NONE | PROJ NO. MD5012Ø | SHEET 10 OF 11

REVISION HISTORY							
E. C. N.	ZONE	REV	DESCRIPTION	DATE	APPROVED DWN	CM	PE
		A	SEE 137101-7_A XLS FOR COMPONENT DATA AND REVISION HISTORY.	02/03/05	TLM	KZ	EMB

COMPONENT MAP
TOP SIDE

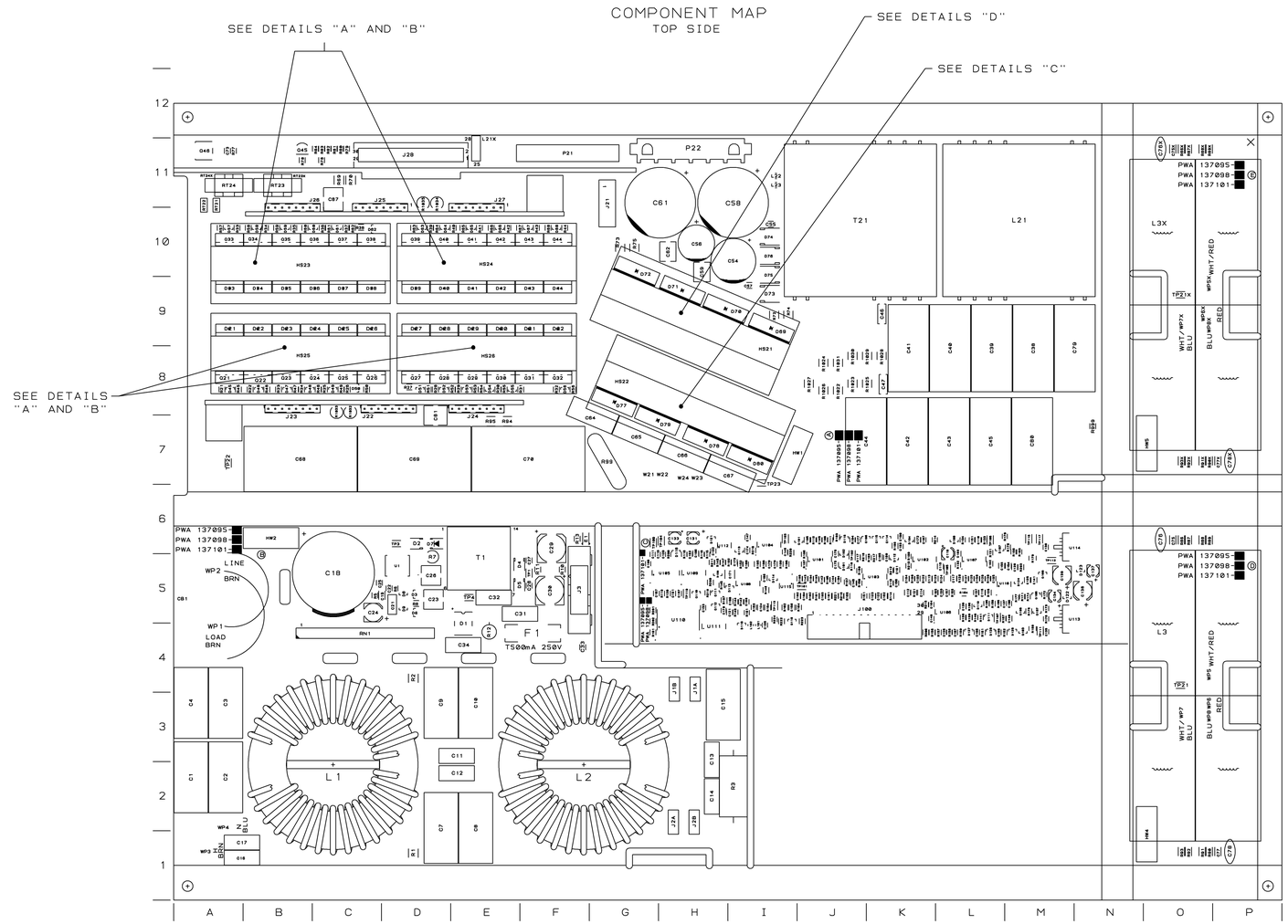

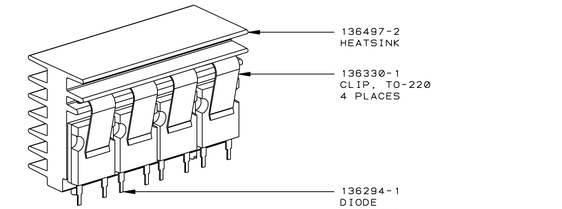

DETAIL "D"
SCALE 1:1

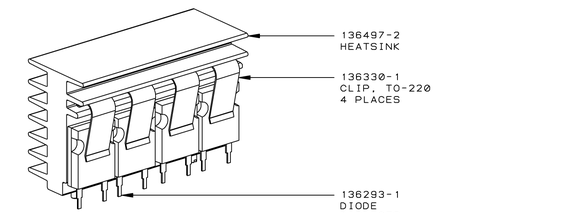

DETAIL "C"
SCALE 1:1

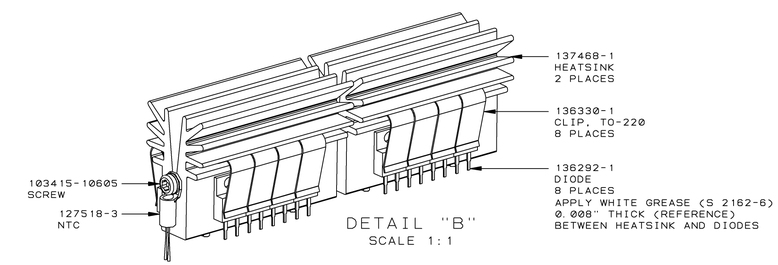

DETAIL "B"
SCALE 1:1

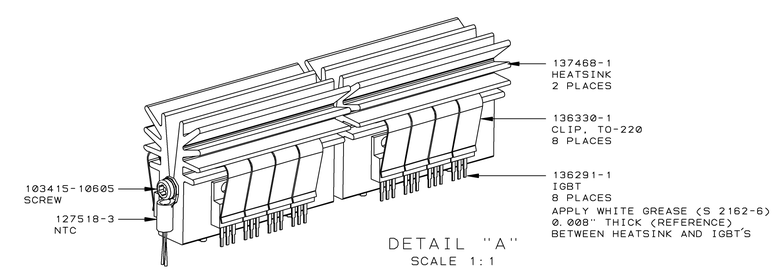

DETAIL "A"
SCALE 1:1

UNCONTROLLED
UNLESS OTHERWISE MARKED IN RED INK BY CM AS A CONTROLLED COPY, COPIES OF THESE DOCUMENTS INCLUDING ASSOCIATED ELECTRONIC REPRODUCTIONS ARE FOR REFERENCE ONLY.

THESE DRAWINGS AND SPECIFICATIONS ARE THE PROPERTY OF CROWN INTERNATIONAL, INC. AND SHALL NOT BE REPRODUCED, COPIED, OR USED AS THE BASIS FOR THE MANUFACTURE OR SALE OF APPARATUS OR DEVICES WITHOUT PERMISSION.

DWN	TLM	02/03/05
CM	KZ	2/7/05
PE	EMB	02/03/05

DISTRIBUTION: K

FILENAME: 137101-7_A_01.PCB

TOLERANCE UNLESS OTHERWISE SPECIFIED
.00 = ±.02"
.000 = ±.010"
DRILLS = ±.003"

DO NOT SCALE DRAWING

crown INTERNATIONAL, INC.
1718 W. MISHAWAKA RD.
ELKHART IN, 46517
PHONE 574-294-8000
WWW.CROWNAUDIO.COM

TITLE: PWA, I-TECH 4000 PANEL 3

SIZE	DWG NO.	REV
D	137101-7	A

SCALE FULL | PROJ NO. MDS01Z0 | SHEET 1 OF 4

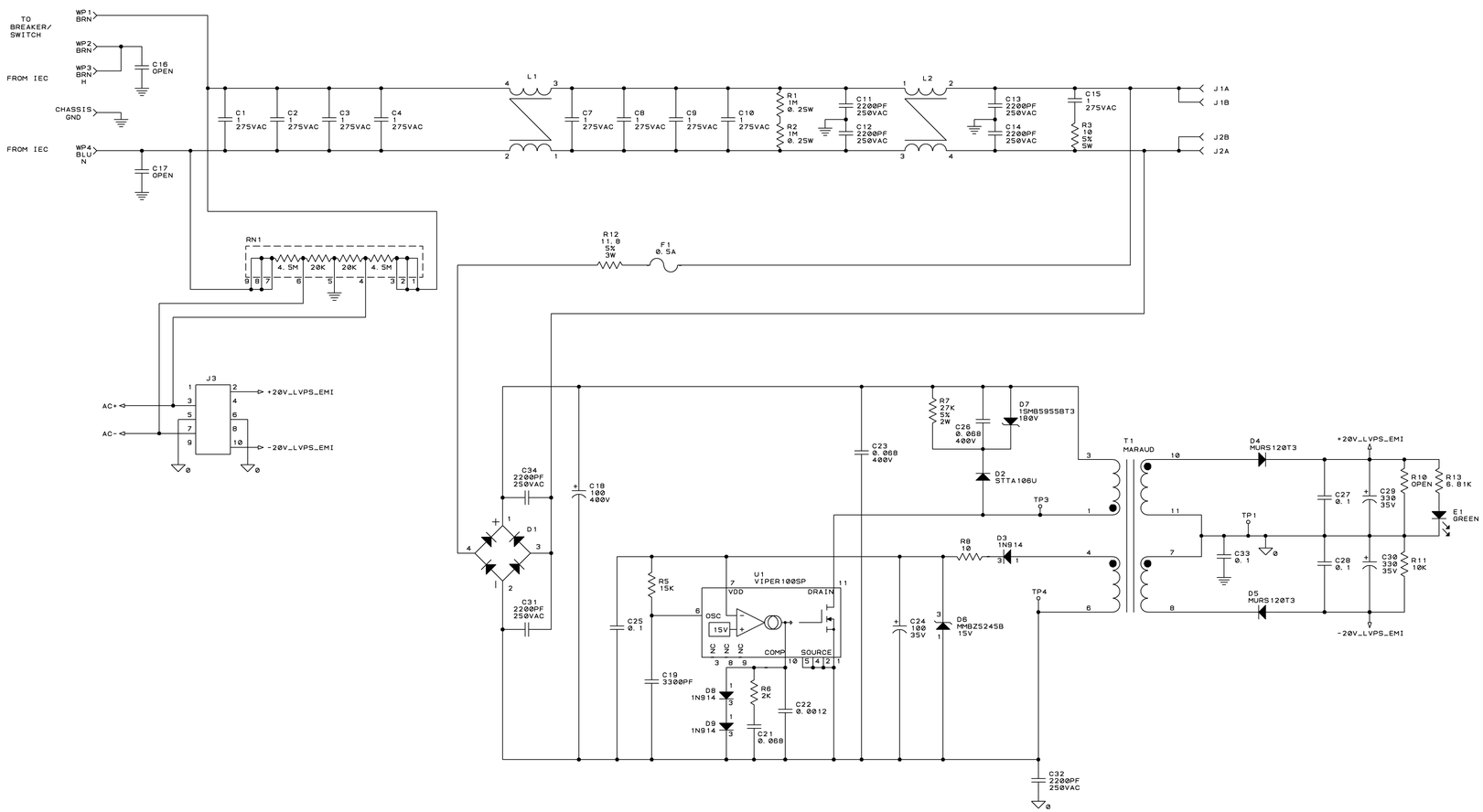

NOTES:

1. ALL RESISTORS ARE IN OHMS, 1/10W, 1%. UNLESS OTHERWISE SPECIFIED.
2. ALL CAPACITORS ARE IN MICROFARADS. UNLESS OTHERWISE SPECIFIED.
3. SEE 137101-7_A.XLS FOR PWA DATA AND REVISION HISTORY.

REFERENCE DESIGNATOR RANGE IS 1-21
EXCEPT FOR CAPACITORS WHICH ENDS AT C33

(B) EMI FILTER / LVPS

UNCONTROLLED
UNLESS OTHERWISE MARKED IN RED INK BY CM AS A CONTROLLED COPY, COPIES OF THESE DOCUMENTS INCLUDING ASSOCIATED ELECTRONIC REPRODUCTIONS ARE FOR REFERENCE ONLY.

THESE DRAWINGS AND SPECIFICATIONS ARE THE PROPERTY OF CROWN INTERNATIONAL, INC. AND SHALL NOT BE REPRODUCED, COPIED, OR USED AS THE BASIS FOR THE MANUFACTURE OR SALE OF APPARATUS OR DEVICES WITHOUT PERMISSION.

SIZE	DWG NO.	REV
D	137101-7	A
SCALE NONE	PROJ NO. MDS01Z0	SHEET 2 OF 4

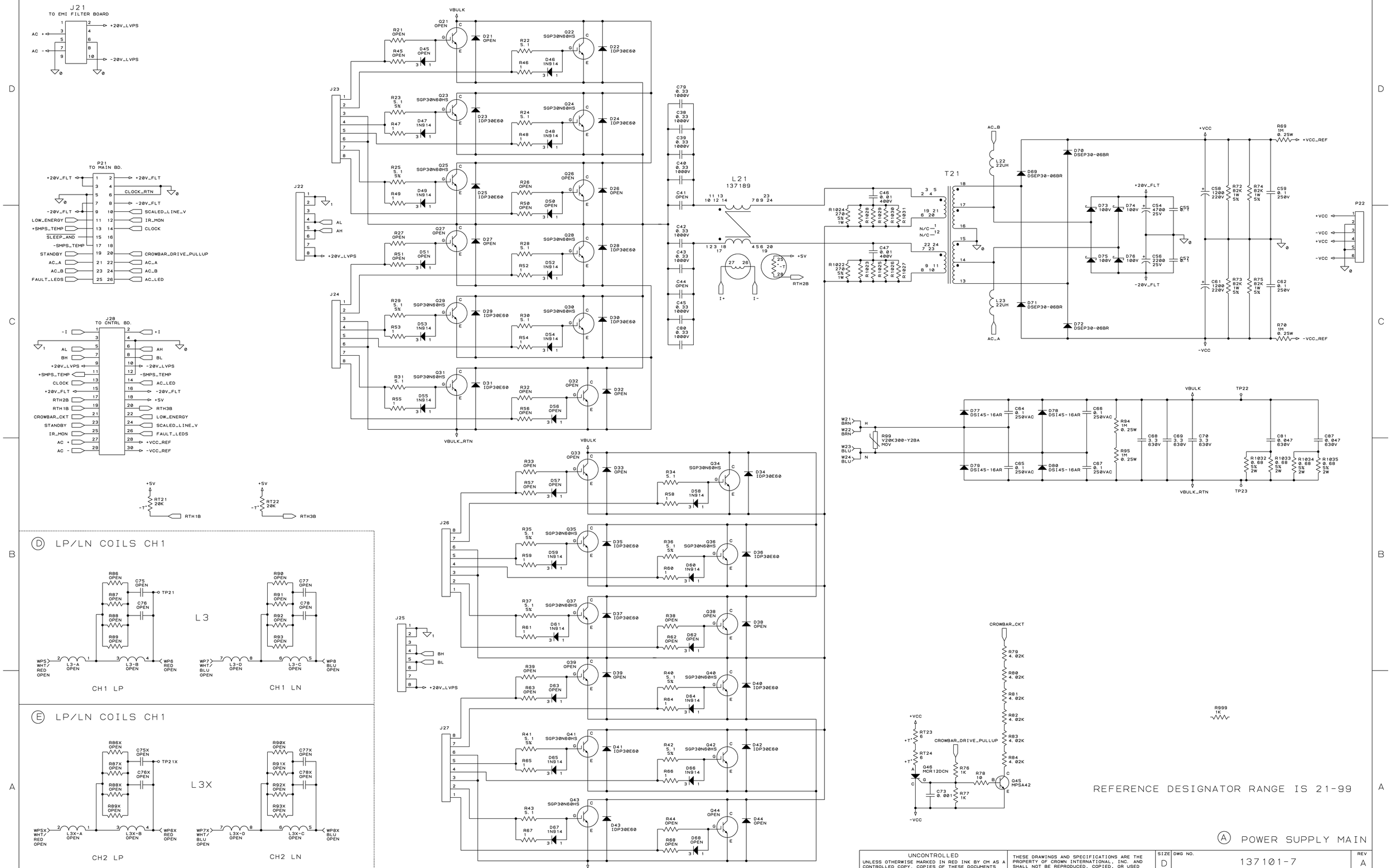

A POWER SUPPLY MAIN

UNCONTROLLED
UNLESS OTHERWISE MARKED IN RED INK BY CM AS A CONTROLLED COPY, COPIES OF THESE DOCUMENTS INCLUDING ASSOCIATED ELECTRONIC REPRODUCTIONS ARE FOR REFERENCE ONLY.

THESE DRAWINGS AND SPECIFICATIONS ARE THE PROPERTY OF CROWN INTERNATIONAL, INC. AND SHALL NOT BE REPRODUCED, COPIED, OR USED AS THE BASIS FOR THE MANUFACTURE OR SALE OF APPARATUS OR DEVICES WITHOUT PERMISSION.

SIZE	DWG NO.	REV
D	137101-7	A
SCALE NONE	PROJ NO. MD501Z0	SHEET 3 OF 4

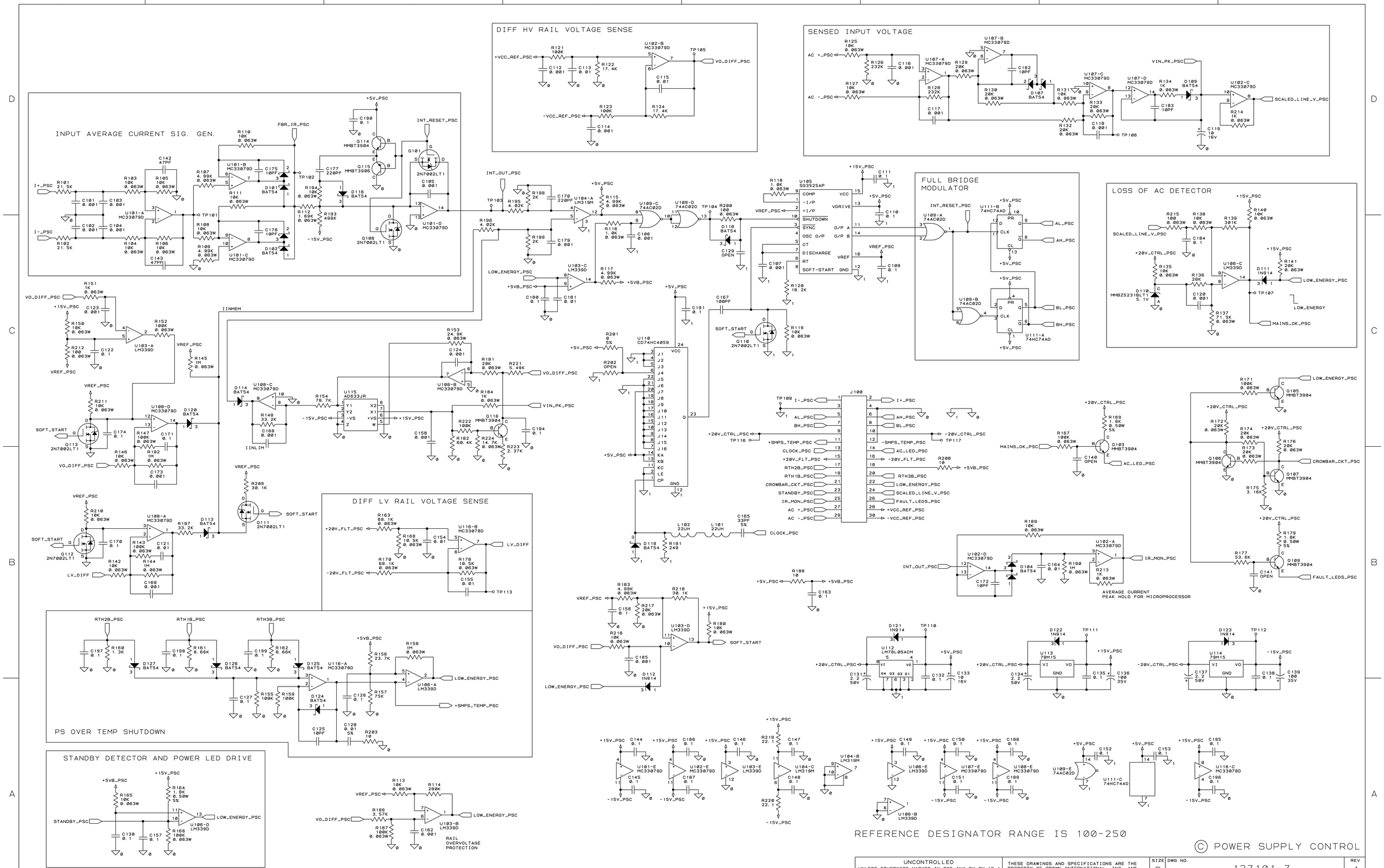
DIFF HV RAIL VOLTAGE SENSE
SENSED INPUT VOLTAGE
INPUT AVERAGE CURRENT SIG. GEN.
FULL BRIDGE MODULATOR
LOSS OF AC DETECTOR
DIFF LV RAIL VOLTAGE SENSE
PS OVER TEMP SHUTDOWN
STANDBY DETECTOR AND POWER LED DRIVE
RAIL OVERVOLTAGE PROTECTION
AVERAGE CURRENT PEAK HOLD FOR MICROPROCESSOR
REFERENCE DESIGNATOR RANGE IS 100-250
© POWER SUPPLY CONTROL
UNCONTROLLED
UNLESS OTHERWISE MARKED IN RED INK BY CM AS A CONTROLLED COPY, COPIES OF THESE DOCUMENTS INCLUDING ASSOCIATED ELECTRONIC REPRODUCTIONS ARE FOR REFERENCE ONLY.
THESE DRAWINGS AND SPECIFICATIONS ARE THE PROPERTY OF CROWN INTERNATIONAL, INC. AND SHALL NOT BE REPRODUCED, COPIED, OR USED AS THE BASIS FOR THE MANUFACTURE OR SALE OF APPARATUS OR DEVICES WITHOUT PERMISSION.
SIZE D
DWG NO. 137101-7
REV A
SCALE NONE
PROJ NO. MD501Z0
SHEET 4 OF 4